REVISIONS			
REV	DESCRIPTION	DATE	APPROVED
04 0	DELETED 45°, ADDED .020±.010 X 45° CH'F PER ECN 90-0987-2	BME 10/22/90	KCM
05 0	ELECTRICAL- FREQ RANGE WAS D.C. TO 18.0, VSWR WAS 1.15 MAX, MECHANICAL- INTERFACE DIM WAS PER MIL-STD 348 PER ECN 91-0357-1 (1 OF 2)	TMD 5-15-91	EFH 5-16-91
06 0	REVISED PER ECN 97-0028-1	2/14/97	S. Morley

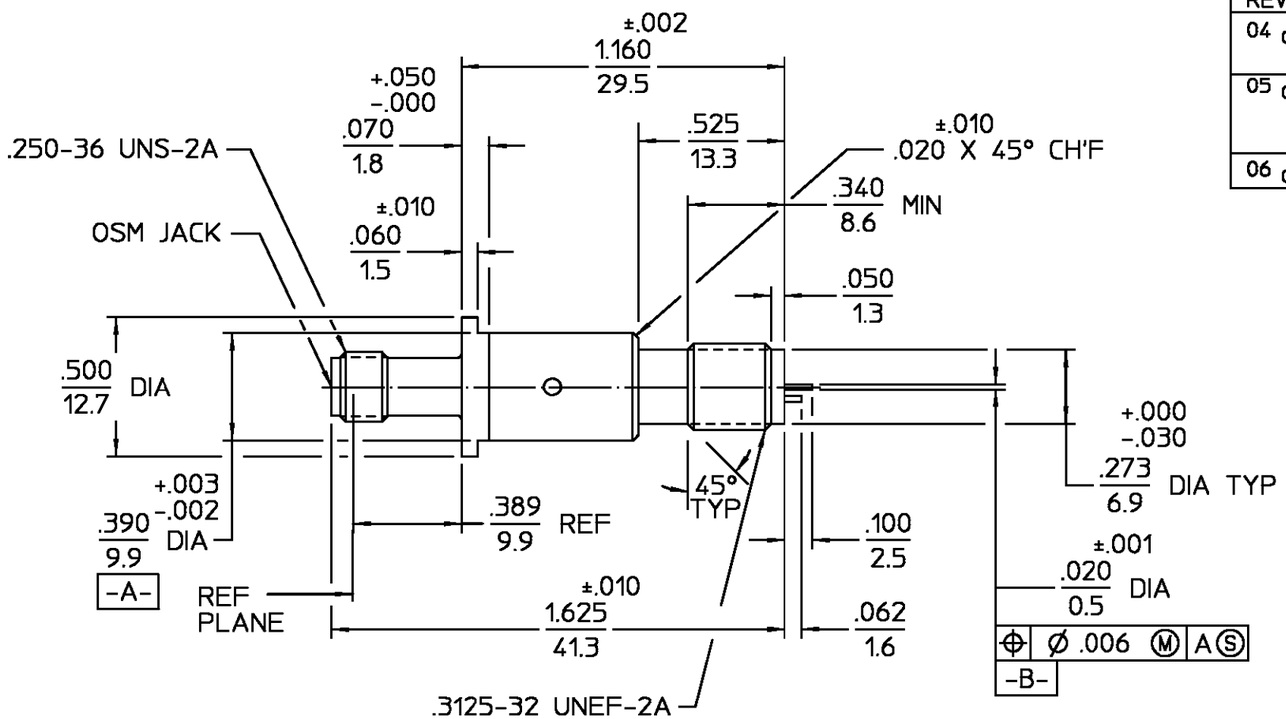

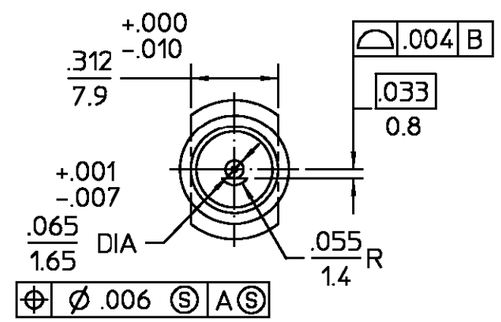

NOTES:

1. CAPTURED CENTER CONTACT.

ELECTRICAL	MECHANICAL	ENVIRONMENTAL
Nominal Impedance (Ohms) 50	Interface Dimensions MIL-STD-348A FIG 310-2	Temperature Rating -65° To 105°C
Frequency Range (GHz) 6.0 TO 18.0	Recommended Mating	Thermal shock MIL-STD-202, Method 107 Test Condition A
Volt Rating (VRMS MAX) 335	Torque N/A	Moisture Resistance - MIL-STD-202, Method 106
VSWR 1.10:1 MAX	Mating Characteristics:	Corrosion - MIL-STD-202, Method 101, Condition B, 5% salt spray
Insertion Loss (dB MAX) 0.3	Insertion (MAX Lbs) 3.0	
RF Leakage -90-f(GHZ)db MAX	Withdrawal (MIN Oz) 1.0	
Corona, 70,000 Ft (VRMS MIN) 150	Connector Engagement and Disengagement (In/Lbs MAX) 2.0	
Dielectric Withstanding Voltage (VRMS MIN) 1000	Center Contact Captivation	
Contact Resistance (Milliohms MAX)	Axial 6.0 Lbs	
Center Contact 3.0	Radial 4.0 In-Oz	
Outer Contact 2.0	Cable Retention	
RF High Potential (VRMS MIN @ 5 MHz) 670	Axial Force N/A	
I.R.(Megohms) 5000	Torque N/A	
	Weight (Grams) 13.6	

.XXX = in
XX.X = mm (REF)

COMPONENT	MATERIAL	FINISH
HOUSING	STAINLESS STEEL PER ASTM-A484 AND ASTM-A582, TYPE 303	GOLD PLATE PER MIL-G-45204
DIELECTRIC	TFE FLUOROCARBON PER ASTM-D-1457	N/A
CENTER CONTACT	BERYLLIUM COPPER PER ASTM-B-196 OR ASTM-B-197, ALLOY C17300, CONDITION H	GOLD PLATE PER MIL-G-45204

UNLESS OTHERWISE SPECIFIED DIMENSIONS ARE IN INCHES
TOLERANCE ON
FRAC. ± 1/64 DEC. ±.005 ANGLES ± 1°

DRAWN BY M.YUEN DATE 6/24/87
CHECKED BY MCD 8/23/88
APP'D BY MCD 8/23/88

AMP

AMP Incorporated
140 Fourth Avenue
Waltham, MA 02451-7599

These drawings and specifications are the property of M/A-COM Incorporated and shall not be reproduced or copied or used in whole or in part as the basis for the manufacture or sale of item(s) without written permission.

USE ASS'Y PROCEDURE

NO. A.P. N/A

TITLE OSM BULKHEAD FEEDTRHU JACK RECEPTACLE STRAIGHT TERMINAL

SIZE	CODE IDENT NO.		REV
B	26805	2058-5486-00	06 0
SCALE 2 : 1			SHEET 1 OF 1

CUSTOMER DRAWING

AMP PART # 1044457-1
SHEET 1 OF 1 REV A