THIS DRAWING IS UNPUBLISHED. RELEASED FOR PUBLICATION 2011
© COPYRIGHT 2011 - ALL RIGHTS RESERVED.

LOC	DIST
GP	00

REVISIONS

P	LTR	DESCRIPTION	DATE	DWN	APVD
	F	REDRAWN PER ECO-12-008266	27AUG2012	CJV	CWR
	G	REVISED PER ECO-13-006091	30APR2013	CJV	CWR
	H	REVISED PER ECO-13-007439	09JUL2013	CJV	CWR

COVER IN PRE-CLAMPED POSITION

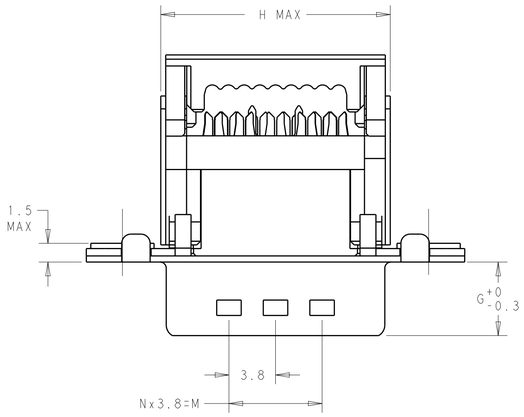

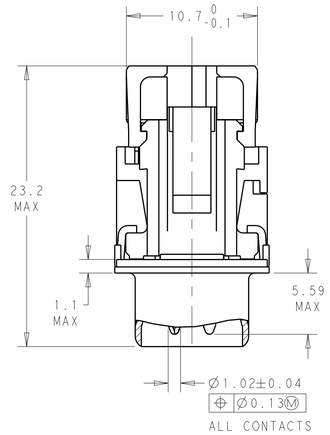

COVER IN CLAMPED POSITION WITH OPTIONAL STRAIN RELIEF ATTACHED

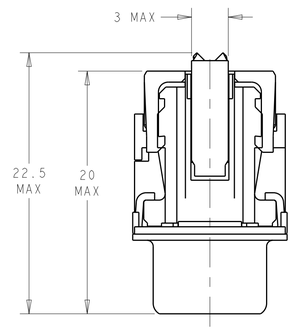

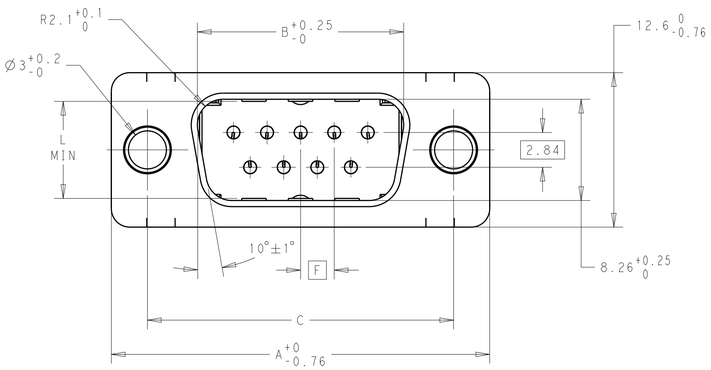

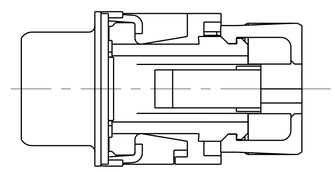

1. CABLES TO BE USED:
   ALL COMMERCIALLY AVAILABLE RIBBON CABLE WITH PVC INSULATION AND TIN OR SILVER PLATED COPPER WIRES. SEE WIRE INFORMATION IN TABLE BELOW.
2. 9 POSITION VERSION SHOWN.
3. USE ONLY WITH STRAIN RELIEF CLAMP.
4. OPTIONAL STRAIN RELIEF CLAMPS:
   9 POSITION = 4-1393560-3 (V42254-A4000-D9)
   15 POSITION = 4-1393560-5 (V42254-A4000-D15)
   25 POSITION = 4-1393560-6 (V42254-A4000-D25)
   37 POSITION = 4-1393560-7 (V42254-A4000-D37)
5. CONTACTS ARE STAMPED AND FORMED.
6. PACKAGED IN BLISTER PACKS.
7. PACKAGED ON REELS.
8. PLATING DETAILS: ALL MEET PERFORMANCE LEVEL 2 PER DIN 41652 P.2 AND P.4.
   UNDERPLATE: NICKEL OVER ENTIRE CONTACT
   CONTACT MATING SURFACE ALTERNATE 1: GOLD
   CONTACT MATING SURFACE ALTERNATE 2: GOLD FLASH OVER PALLADIUM-NICKEL
   IDC WIRE TERMINATION END: MATTE TIN
   SHELL PLATING: BRIGHT TIN OVER NICKEL
9. PRESS-ON COVER PROVIDED SEPARATELY (NOT PRE-ASSEMBLED)
10. FLANGES WITH M3 (BLACK) OR 4-40 (BLUE)
    SELF-LOCKING NUTS
    TORQUE RETENTION ≥ 70 N-cm
11. ALL PARTS MARKED WITH TE LOGO.

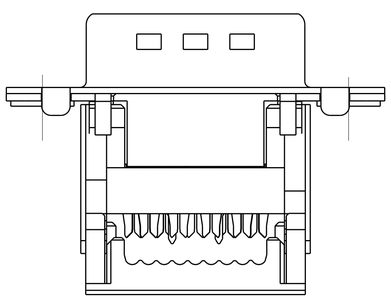

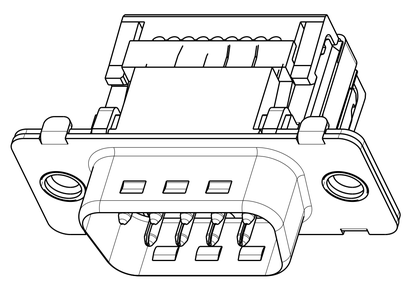

FLANGES WITH HOLES

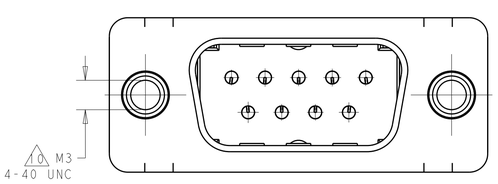

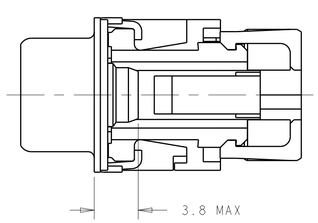

SELF-LOCKING NUT VERSION

WIRE INFORMATION

OVERALL CONDUCTOR CROSS-SECTIONAL AREA IN mm^2	AWG RANGE	OVERALL CONDUCTOR DIAMETER IN mm^2	NO. OF SINGLE STRANDED WIRES	CONDUCTOR	PVC INSULATING SLEEVE DIA
---	30	0.25 (3)	1	SOLID	1.0/1.1
---	28	0.32 (3)	1	SOLID	0.8/1.1
0.09 (3)	28	---	7	STRANDED	0.8/1.1
0.14	26	---	7	STRANDED	0.8/1.1

	STRAIN RELIEF	PKG	FLANGE OPTION	A	B	C	F	G	H	L	M	N	NO OF POSITIONS	SIEMENS PART NUMBER	TE CONNECTIVITY PART NUMBER
	Not Included	(6) (9)	3.0 DIAMETER HOLE	53.42	38.84	47.04 ±0.13	2.76	5.99	40.78	7.65	26.60	7	25	V42254-A6235-C225	1-1393487-8
	Included		3.0 DIAMETER HOLE	69.70	55.30	63.50 ±0.13	2.76	5.99	57.44	7.65	41.80	11	37	V42254-A5235-W235	6-1393486-2
	Included		3.0 DIAMETER HOLE	53.42	38.84	47.04 ±0.13	2.76	5.99	40.78	7.65	26.60	7	25	V42254-A5235-W234	6-1393486-1
	Included		3.0 DIAMETER HOLE	31.19	16.79	25.00 +0.12/-0.13	2.74	6.12	18.73	7.72	7.60	2	9	V42254-A5235-W232	5-1393486-9
	Not Included		3.0 DIAMETER HOLE	69.70	55.30	63.50 ±0.13	2.76	5.99	57.44	7.65	41.80	11	37	V42254-A5235-C237	4-1393486-6
	Not Included		3.0 DIAMETER HOLE	53.42	38.84	47.04 ±0.13	2.76	5.99	40.78	7.65	26.60	7	25	V42254-A5235-C225	4-1393486-4
	Not Included	(6)	3.0 DIAMETER HOLE	39.52	25.12	33.30 +0.15/-0.1	2.74	6.12	27.26	7.69	15.20	4	15	V42254-A5235-C215	4-1393486-3
	Not Included		3.0 DIAMETER HOLE	31.19	16.79	25.00 +0.12/-0.13	2.74	6.12	18.73	7.72	7.60	2	9	V42254-A5235-C209	4-1393486-2
OBSOLETE	Not Included		M3 SELF-LOCKING NUTS	31.19	16.79	25.00 +0.12/-0.13	2.74	6.12	18.73	7.72	7.60	2	9	V42254-A5234-C209	1-1393486-4
	Not Included		4-40 SELF-LOCKING NUTS	53.42	38.84	47.04 ±0.13	2.76	5.99	40.78	7.65	26.60	7	25	V42254-A5232-C225	9-1393485-3
	Not Included		4-40 SELF-LOCKING NUTS	39.52	25.12	33.30 +0.15/-0.1	2.74	6.12	27.26	7.69	15.20	4	15	V42254-A5232-C215	9-1393485-2
	Not Included		4-40 SELF-LOCKING NUTS	31.19	16.79	25.00 +0.12/-0.13	2.74	6.12	18.73	7.72	7.60	2	9	V42254-A5232-C209	9-1393485-1
OBSOLETE	Not Included	(7)	4-40 SELF-LOCKING NUTS	39.52	25.12	33.30 +0.15/-0.1	2.74	6.12	27.26	7.69	15.20	4	15	V42254-A4232-C215	6-1393485-8

THIS DRAWING IS A CONTROLLED DOCUMENT. DIMENSIONING AND TOLERANCING PER ASME Y14.5M-2009

DIMENSIONS: mm

TOLERANCES UNLESS OTHERWISE SPECIFIED:
0 PLC ±-
1 PLC ±-
2 PLC ±-
3 PLC ±-
4 PLC ±-
ANGLES ±1°

MATERIAL - -
FINISH - -

DWN RAGHAVENDRA 03MAR2012
CHK CARL ROHDE 03MAR2012
APVD CARL ROHDE 03MAR2012
PRODUCT SPEC -
APPLICATION SPEC -
WEIGHT -

TE Connectivity

NAME D-SUB IDC PLUGS WITH GROUNDING FINGERS -

SIZE	CAGE CODE	DRAWING NO	RESTRICTED TO
A1	00779	C-9-1393485-1	-

CUSTOMER DRAWING | SCALE 4:1 | SHEET 1 OF 1 | REV H