THIS DRAWING IS UNPUBLISHED. RELEASED FOR PUBLICATION
© COPYRIGHT 2010 BY TYCO ELECTRONICS CORPORATION. ALL RIGHTS RESERVED.

LOC	DIST
DW	—

REVISIONS

P	LTR	DESCRIPTION	DATE	DWN	APVD
		SEE SHEET 1.			

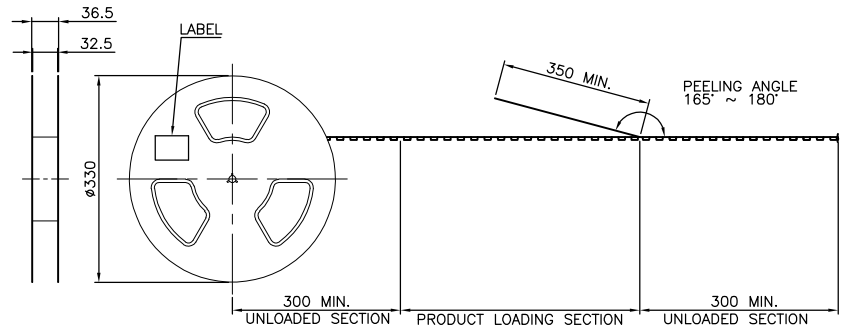

NOTES:

1. MATERIAL:
   BOX: FIBREBOARD, CORRUGATED, DOUBLE WALL.
   COVER TAPE: PET, TRANSPARENT COLOR.
   CARRIER TAPE: POLYSTYRENES, TRANSPARENT COLOR.
   REEL: HIPS, BLUE COLOR.
   BAG: POLYETHYLENES, TRANSPARENT COLOR.
2. EACH BAG SHALL BE INCLUDED DESICCANT.
3. PEELING STRENGTH: 0.1 ~ 1.3 N (10 ~ 130 GRAMS).
4. PEELING SPEED: 300 mm/min.

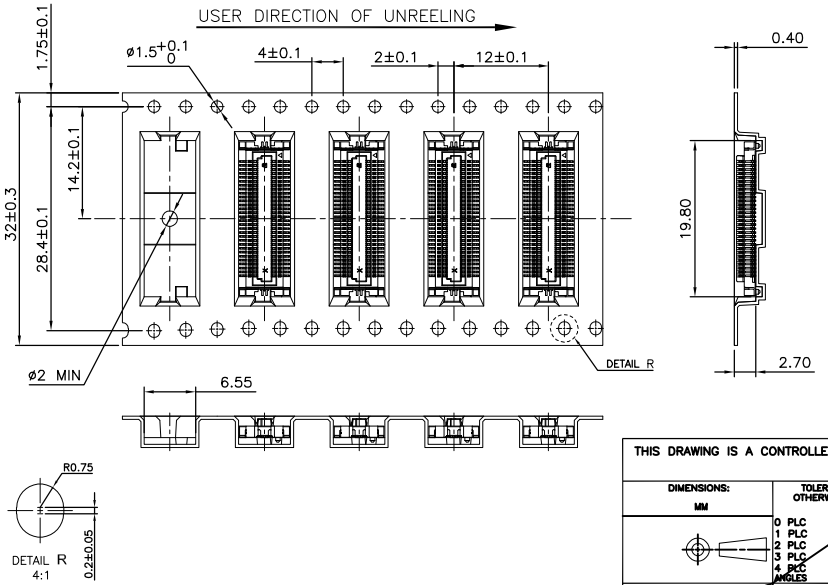

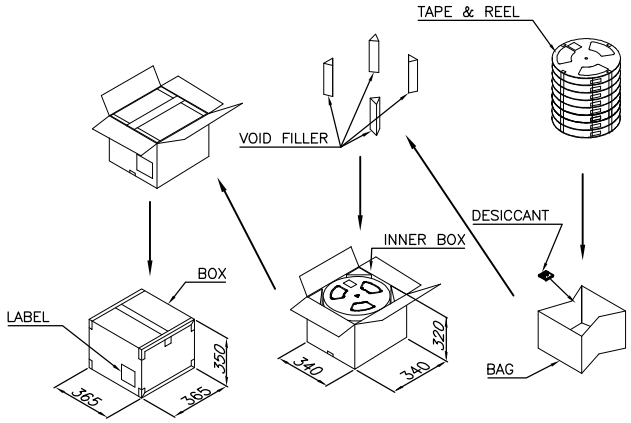

1500	8	12000 PCS	9.09 KG	4.49 KG
PCS/ TAPE	REELS/ BOX	QUANTITY	GROSS WEIGHT	NET WEIGHT

THIS DRAWING IS A CONTROLLED DOCUMENT.

DIMENSIONS: MM

TOLERANCES UNLESS OTHERWISE SPECIFIED:
0 PLC ± –
1 PLC ± –
2 PLC ± –
3 PLC ± –
4 PLC ± –
ANGLES ± –

MATERIAL –

FINISH –

DWN	A. WU	02NOV2010
CHK	S. CHIEN	02NOV2010
APVD	W. KODAMA	02NOV2010

PRODUCT SPEC –

APPLICATION SPEC –

WEIGHT –

TE Connectivity

NAME: 0.5 PITCH BOARD–TO–BOARD CONNECTOR, SMT, 60 POSITION, RECEPTACLE

SIZE	CAGE CODE	DRAWING NO	RESTRICTED TO
A3	00779	C–2041315	–

CUSTOMER DRAWING | SCALE – | SHEET 2 OF 2 | REV B
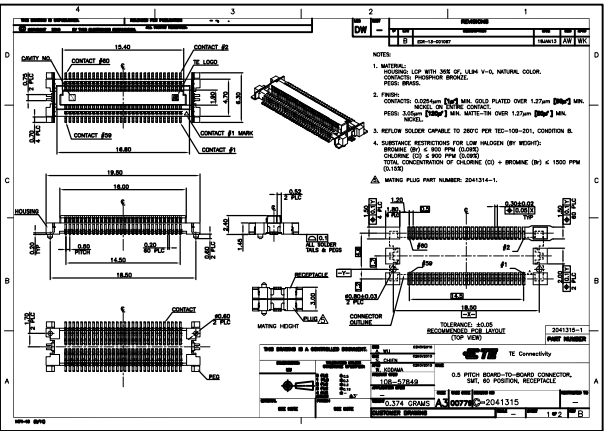
1471–19 (3/11)