A4

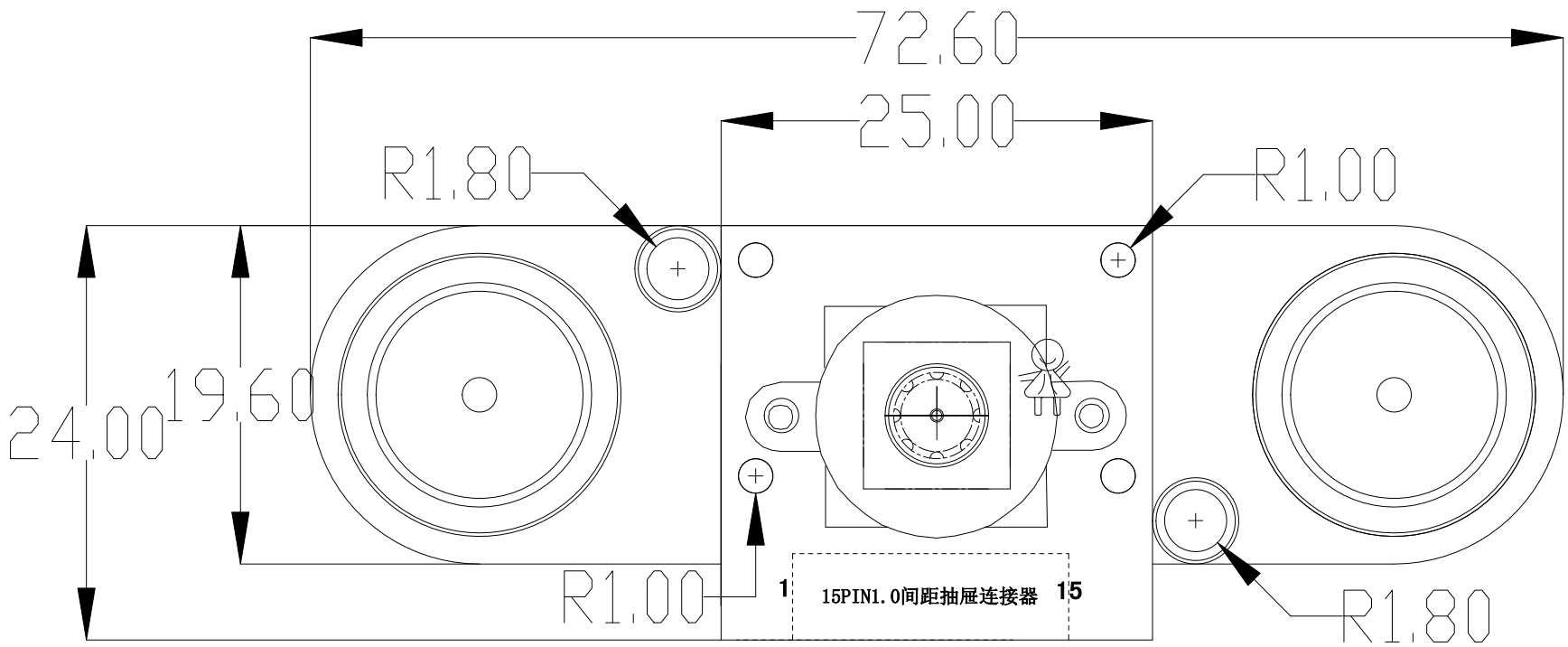

Lens Specification

Optical Specification	
MAX IMAGE CIRCLE	Φ14
Focal Length	1.85mm
FOV (D)	160°
TV Distortion	<7.6%
F .Number	F2.4

PIN DEFINITION

PIN	SIGNAL	PIN	SIGNAL	PIN	SIGNAL
1	GND	6	CAM1-DP1	11	CAM-GPI0
2	CAM1-DN0	7	GND	12	CAM-CLK
3	CAM1-DP0	8	CAM1-CN	13	SCL0
4	GND	9	CAM1-CP	14	SDA0
5	CAM1-DN1	10	GND	15	AVDD3.3

NOTE:

1 线性尺寸未注公差均为±0.2mm

NO.	更改内容	NAME	DATE
4			
3			
2			
1	初 稿	张凤宾	17.11.22

一般公差	
尺寸范围	容许公差
ANGLE	± 5°

TITLE	CMOS Camera Module			SCALE	1:1
				REV	1.0
				SHEET	1/1
DRAWING	刘文虎	DATE	17.11.22	PROJ.	
CHECKED		UNIT	MM	QTY	1
APPROVED		WEIGHT		SIZE	A4
Part Name	Raspberry Pi Camera				
Customer P/N					
Material					