SHEET OF

NOTES:
1. ALL DIMENSION IN MM [INCH]
2. GENERAL TOLERANCE: X.X=±0.4
   X.XX=±0.25
3. TERM. NOS. FOR REF. ONLY
4. CONTACT RATING SWITCHING: 150mA, 250V AC/DC
   350mA, 110V AC/DC
5. CONTACT RATING (NON-SWITCHING) 5A
6. CONTACT MATERIAL; SILVER over COPPER ALLOY
7. OPERATING FORCE: 425±100 CM/STANDARD
8. OPERATING TEMP: -30° to 85°C
▲ 9. CIRCUIT SP: 12 POSITIONS, 30° INDEX.
10. DIELECTRIC STRENGTH 1000V RMS min.@ SEA LEVEL
▲ 11. DESIGNATE MAJOR DIMENSIONS
▲ 12. HARDWARE SUPPLIED ON SWITCH- SEE BELOW
STOPRING, LOCKWASHER, & HEXNUT.

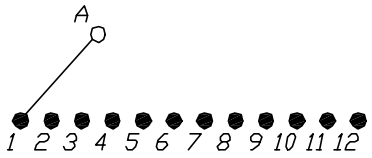

CONTACT CONFIGURATION
Timing; (MBB) Shorting

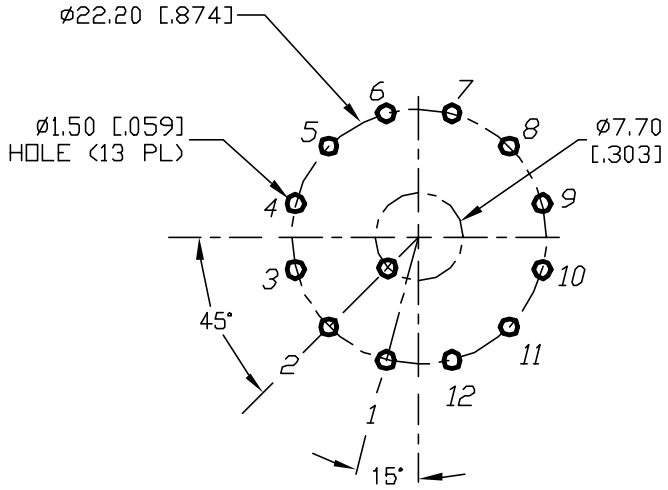

RECOMMENDED P.C.B. LAYOUT

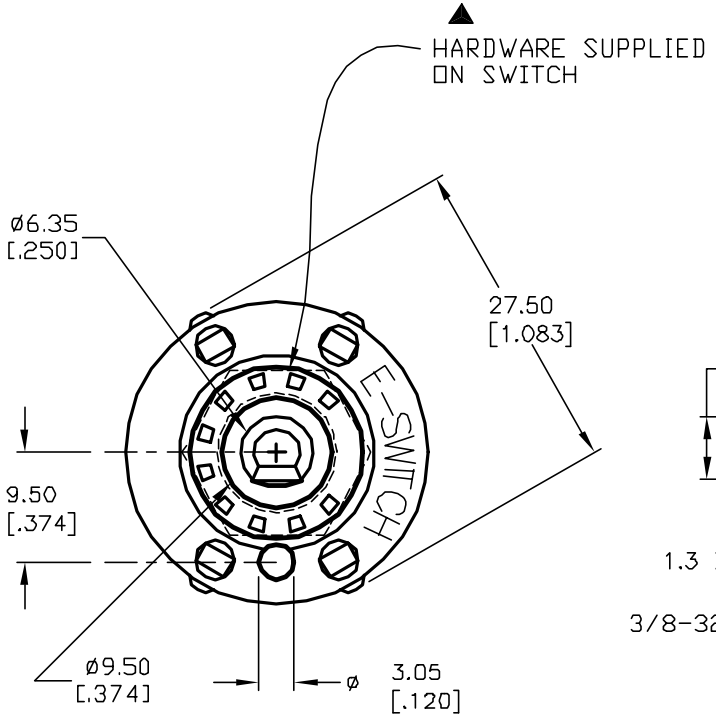

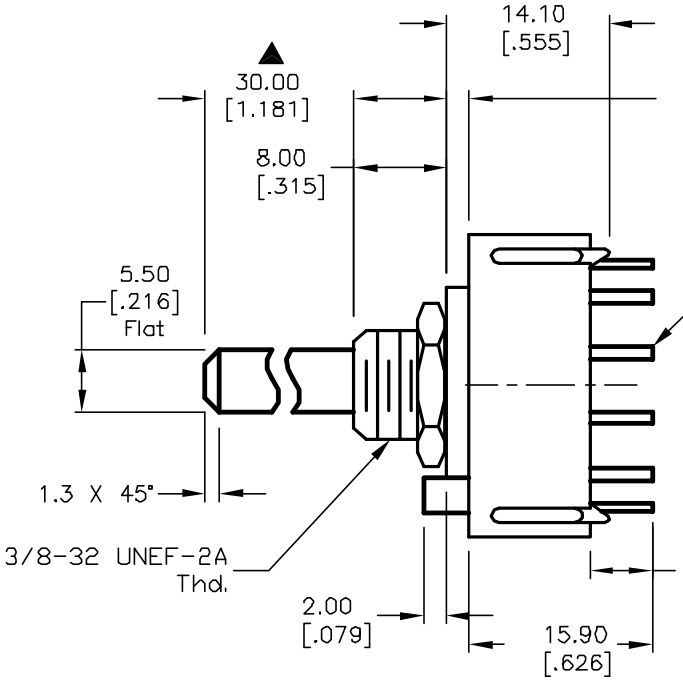

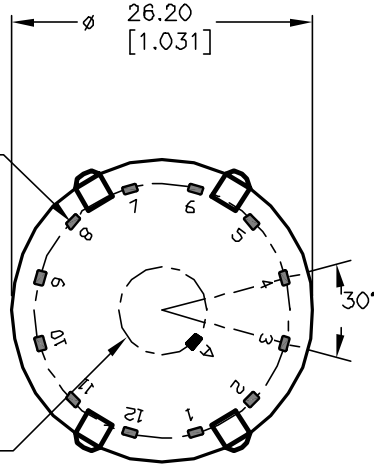

REV.	ECN No.	DESCRIPTION	DATE	CHKD
D	12821	REVISED NOTE 12	3/4/03	CJB
C	12249	REV DESC. PER CATALOG	6/19/02	CJB
B	11278	Dim. Change 29.50 to 30.00	4/27/01	CJB

THE INFORMATION CONTAINED IN THIS DOCUMENT IS PROPRIETARY TO E-SWITCH AND IS NOT TO BE COPIED OR TRANSFERRED

E-SWITCH®

TITLE KC-52-A-(30.0mm) 01-S-P-S

SCALE	DATE	DR	DWG	REV
1.5:1	3/6/01	CJB	G510540	D