THIS DRAWING IS UNPUBLISHED. RELEASED FOR PUBLICATION -,- .
© COPYRIGHT - . TE Connectivity . ALL RIGHTS RESERVED.

PART NUMBER	REV	FIRST USED	MACHINE REFERENCE	FEED TYPE
566428-1	F	356462-2	G-SPLICE TERM	AIR FEED
566428-2	G	2161300-1	5K CE & GII THRU SPLICE	AIR FEED
7-566428-7	E	356462-2	SPARE PARTS KIT	-
7-566428-8	G	-	CONV. KIT FOR -1 TO -2	-

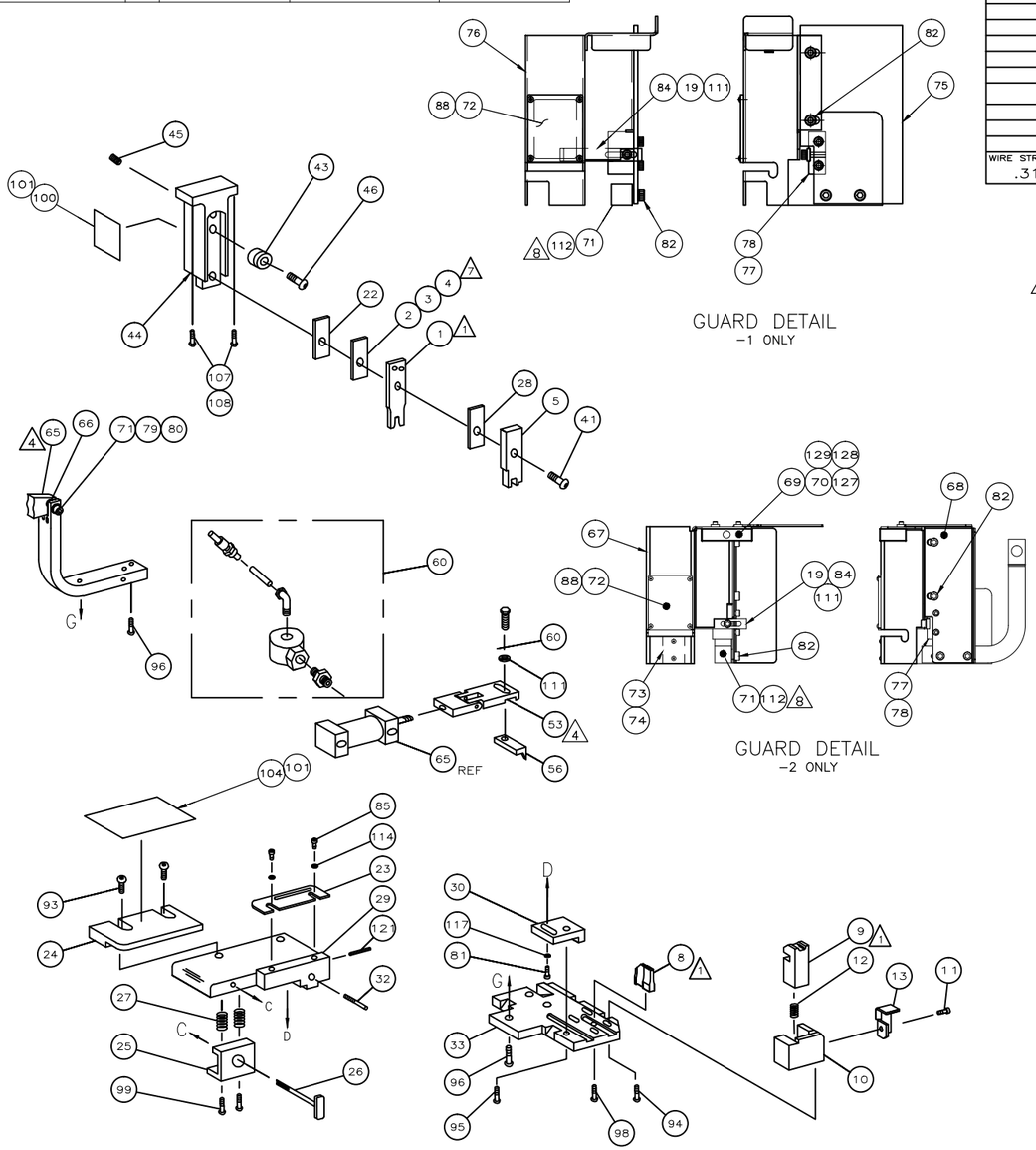

1. RECOMMENDED SPARE PARTS.
2. GREASE LIGHTLY.
3. GUARD MUST BE IN PLACE WHEN OPERATING APPLICATOR IN A BENCH MACHINE.
4. SEE DRAWING FOR COMPONENTS
5. ITEM NOT SHOWN
6. WIRE COMBINATION FOR SET-UP ONLY. SEE TERMINAL CUSTOMER DRAWING FOR CMA RANGE AND CRIMP HEIGHT FORMULA.
7. INSTALL ITEMS 2,3 & 4 AS REQUIRED REMAINING ITEMS TO STAY WITH APPLICATOR.
8. PLACE ITEM 112 BETWEEN ITEM 71 AND 75 ON -1. PLACE ITEM 112 BETWEEN ITEM 71 AND 68 ON -2.

TERMINAL NAME: SPLICE

6 1217990
6 63561

CRIMPING DATA

PAD NO.	CRIMP HEIGHT	WIRE SIZE	WIRE SET UP
6	.109 ±.002 [2.77 ±0.05mm]	8,000 CMA	(5)18 6
6	.131 ±.002 [3.33 ±0.05mm]	13,000 CMA	(2)12 6
-	-	-	-
-	-	-	-
-	-	-	-
-	-	-	-
-	-	-	-
-	-	-	-

CRIMP	SIZE	TYPE	RANGE
WIRE	.180 [4.57mm]	F	- 6
INSUL	-	-	-

WIRE STRIP LENGTH	TERM APPL SPEC	FEED	APPL INSTRUCTION	SET UP GAGE	LAYOUT
.310-.350	114-2088	.630	408-8318(-1) 408-127000(-2)	-	12289

-78	-77	-2	-1	PART NO	DESCRIPTION	ITEM NO
2	-	2	-	18029-2	M4 HEX NUT	129
2	-	2	-	18025-2	M4 LOCK WASHER	128
2	-	2	-	18027-2	M4 FLAT WASHER	127
1	-	1	-	408-32162	THRU SPLICE IS SHEET-GII	126
-	-	1	-	408-127000	THRU SPLICE IS SHEET	125
-	-	1	1	217238-1	GENERAL INSTRUCTION PACKAGE	124
-	-	-	1	408-8318	THRU SPLICE IS SHEET	123
						122
-	-	1	1	4-21028-0	PIN,SLT SPR(Ø.093x.75)ST GDE PL	121
						120
						119
						118
-	-	1	1	21024-5	WASHER, LOCK(#10)ADJ BLOCK	117
						116
						115
-	-	2	2	21024-2	WASHER,LOCK(#4)FRONT STP GUIDE	114
						113
-	-	AR	AR	21899-2	WASHER, FLAT (#10)	112
-	-	2	2	21024-4	WASHER,LOCK(#8)STRIPPER	111
						110
						109
2	-	2	-	3-18023-3	SCR,SHC (M6 X 50)	108
-	-	-	2	3-18023-1	SCR, SHC (M6x30)	107
						106
-	-	REF	REF	1490705-1	KIT, WIRE SHELF	105
-	-	1	1	690701-2	I.D. STRIP GUIDE	104
-	-	-	-	-	-	103
						102
-	-	AR	AR	982057-2	TAPE, POLYURETHANE FOAM	101
-	-	1	1	819347-1	I.D. RAM	100
-	-	2	2	3-21002-0	SCR,BHC(10-32x.88)DRAG	99
-	-	1	1	22733-8	SCR,BHC(8-32x.38 LW)ANVIL	98
-	-	-	-	-	-	97
-	-	2	2	2-22733-8	SCR,BHC(1/4-20x.62)HSG	96
-	-	1	1	2-21002-7	SCR,BHC(10-32x.50)SG ADJ BLK	95
-	-	2	2	2-21002-2	SCR,BHC(8-32x.50)TERM H DWN	94
-	-	2	2	2-21002-3	SCR,BHC(8-32x.62)HOLDER	93
						92
						91
						90
						89
-	-	4	4	1-21002-0	SCR,BHC(2-56X.25)	88
						87
-	-	1	1	2-22603-1	SCR,HEX HD(8-32x.38)FEED FINGER	86
-	-	2	2	1-21000-3	SCR,SHC(4-40x.25)F ST GUIDE	85
-	-	1	1	2-21000-7	SCR,SHC(8-32x.50)STRIPPER	84
						83
-	-	4	4	3-21000-4	SCR,SHC(10-32x.38)GUARD	82
-	-	1	1	3-22603-1	SCR, HEX (10-32X.38)SG ADJ BL	81
-	-	1	1	3-21001-5	SCR, SHC 3/8-16x1.00	80
-	-	1	1	21024-8	WASHER, FLAT 3/8	79
-	-	1	1	1338118-1	MOUNT, STRIPPER	78
-	-	2	2	1-21000-9	SCR, SHC 6-32x.38	77
-	-	-	1	1338175-4	GUARD	76
-	-	-	1	1338176-1	GUARD, EXTENSION	75
-	-	1	1	1338177-1	DEFLECTOR	74
-	-	2	2	21002-9	SCR,BHC(2-56 x .19)DEFL	73
-	-	1	1	1338174-1	WINDOW, GUARD	72
-	-	1	1	1338116-1	BRACKET, FEED	71

QTY REQD PER ASSY — PARTS LIST

REVISIONS

P	LTR	DESCRIPTION	DATE	DWN	APVD
	G3	ECR-17-017778	12/2017	AW	TE

-78	-77	-2	-1	PART NO	DESCRIPTION	ITEM NO
2	-	2	-	1-18023-3	SCR, SHC, M4 X 16	70
1	-	1	-	2168489-1	ACTUATOR, SPARE MC1	69
1	-	1	-	2161461-1	GUARD, EXTENSION	68
1	-	1	-	2161460-4	GUARD	67
-	-	1	1	371178	BASE MOUNT WASHER	66
-	-	1	1	461065-1	AIR FEED ASSY (1 INCH) 4	65
						64
						63
						62
						61
-	-	1	1	692655-7	AIR FEED VALVE	60
						59
						58
						57
-	-	1	1	1-694433-6	PAWL, FEED	56
						55
						54
-	-	1	1	461062-1	FEED FINGER ASSY 4	53
						52
						51
						50
						49
						48
						47
-	-	1	1	21004-9	SCR,SHC(.31 X .50)WHEEL ADJ	46
-	-	1	1	27058-2	BALL PLUNGER	45
-	-	1	1	1338117-1	TOOL HOLDER ASSY	44
-	-	1	1	1338124-1	WHEEL, ADJ	43
						42
-	-	1	1	7-21002-8	BOLT, CRIMPER(5/16x.87)	41
						40
						39
-	-	-	-	-	-	38
-	-	-	-	-	-	37
-	-	2	2	18027-4	WASHER, FLAT M6 5	36
-	-	2	2	2-18023-9	SCR, SHC M6x20 5	35
						34
-	-	1	1	A2 1752990-1	PLATE, BASE	33
-	-	1	1	690432-3	SCREW, ADJUSTMENT	32
						31
-	-	1	1	455689-1	BLOCK, STRIP GUIDE ADJ	30
-	-	1	1	455671-1	PLATE, STRIP GUIDE	29
-	-	1	1	1-455888-4	SPACER, FRONT SHEAR DEP	28
-	-	2	2	22284-1	SPRING, DRAG	27
-	-	1	1	690546-1	LEVER, DRAG RELEASE	26
-	-	1	1	240792-1	DRAG, TERMINAL	25
-	-	1	1	6-690440-8	GUIDE, STRIP (REAR)	24
-	-	1	1	690438-1	GUIDE, STRIP (FRONT)	23
-	-	1	1	1338200-5	SPACER, WIRE CRIMPER	22
						21
						20
-	-	1	1	1-690472-6	STRIPPER	19
						18
-	-	-	-	-	-	17
-	-	-	-	-	-	16
						15
						14
-	-	1	1	1752988-1	CHIP GUARD	13
-	-	1	1	4-22280-9	SPRING, SHEAR	12
-	-	1	1	690461-3	STOP, SHEAR	11
-	-	1	1	1-690459-0	HOLDER, SHEAR (FRONT)	10
-	1	1	1	454276-5	SHEAR, FLOAT (FRONT) 1	9
-	1	1	1	1633102-1	ANVIL	8
						7
						6
-	-	1	1	1338126-4	DEPRESSOR, SHEAR (FRONT)	5
-	-	1	1	1338200-3	SPACER	4
-	-	1	1	1338200-2	SPACER 7	3
-	-	1	1	1338200-1	SPACER	2
-	1	1	1	1338125-9	CRIMPER, WIRE 1	1

QTY REQD PER ASSY — PARTS LIST

THIS DRAWING IS A CONTROLLED DOCUMENT.

DIMENSIONS: INCHES

TOLERANCES UNLESS OTHERWISE SPECIFIED: 0 PLC ± - ; 1 PLC ± - ; 2 PLC ± .25 ; 3 PLC ± - ; 4 PLC ± - ; ANGLES ± -

MATERIAL -

FINISH -

DWN C.ERISMAN 04OCT99
CHK C. ERISMAN 04OCT99
APVD T.ELBIN 04OCT99
PRODUCT SPEC -
APPLICATION SPEC -
WEIGHT 0.000000
CUSTOMER DRAWING

TE Connectivity

NAME SIDE FEED THRU SPLICE APPLICATOR - -

SIZE	CAGE CODE	DRAWING NO	RESTRICTED TO
A1	00779	C-566428	-

SCALE - SHEET 1 OF 1 REV G3

4805 (1/15)