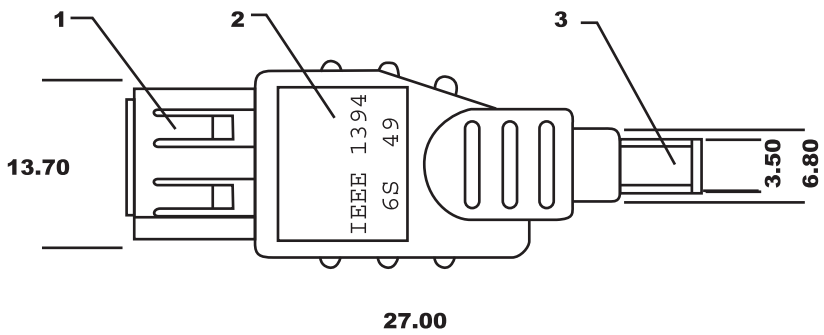

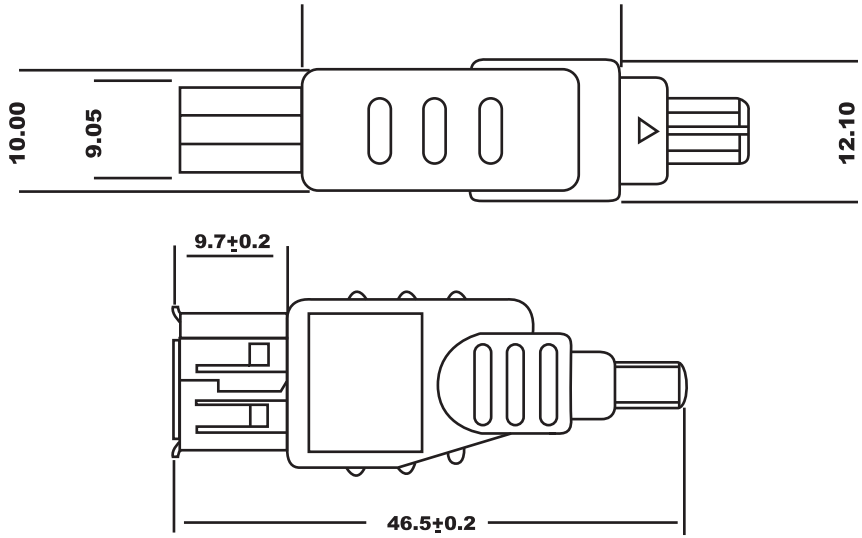

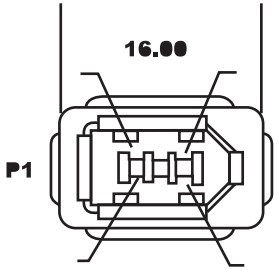

1394 6P Female

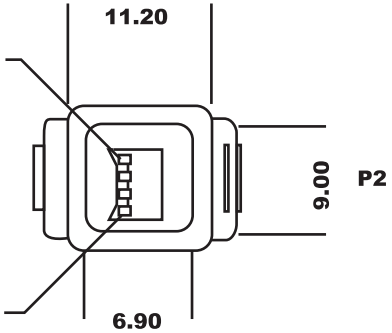

1394 4P Male

PIN Assignment

1394 6P Female	**5**	**6**	**3**	**4**	**Shell**
1394 4P Male	**1**	**2**	**3**	**4**	**Shell**

Note:

1.Hook Up Wire: UL 1007 30AWG 7 Strand L:17mm
2.Connector: P1: IEEE1394 6P Type Female Gold Flash Contact: Nickel Plated Shell Plastic: White
P2:IEEE1394 4P Type Male Gold Flash Contact: Nickel Plated Shell Plastic:Black
3.Inner Mold with Copper Foil
4.Core: F18RID 6.4mm * 3.2mm * 3.5mm
(The wires that were soldered in the PIN 5&PIN 6 of 1394 6P female are through the core)
5.Hood: Molded Type PVC 45P Color:Black(NK-KO1)
6.Electrical Test: <1> 100% Open Short & MIS Wire Test
<2>Contact Resistance 3 Ohms Max
<3>Insulation Resistance 20M Ohms Min
7.Packing: See P-0039 Rev.C Packing Drawing
8.EAN Code: 4016032076162

RoHS Complaint

Scale	1:1
TOLERANCE	
X.X	±0.40
X.XX	±0.25
X.XXX	±0.15
Angle	±3°

Modification	Date	Name

		Name
Drawn	10.24.11	Chappell
Approved		

ASSMANN WSW components

Item No. **AB-1394-1-R**

Title IEEE 1394 Adaptor, 6 Pin Female - 4 Pin Male

Drawing No. **rev00**

Replace | Sheet