DRAWING MADE IN THIRD ANGLE PROJECTION

/home/us024474/tecmod

PART NUMBER	REV	FIRST USED
1852146-1	A	122500-1
1852146-2	A	565435-5
1852146-3	A	354500-1

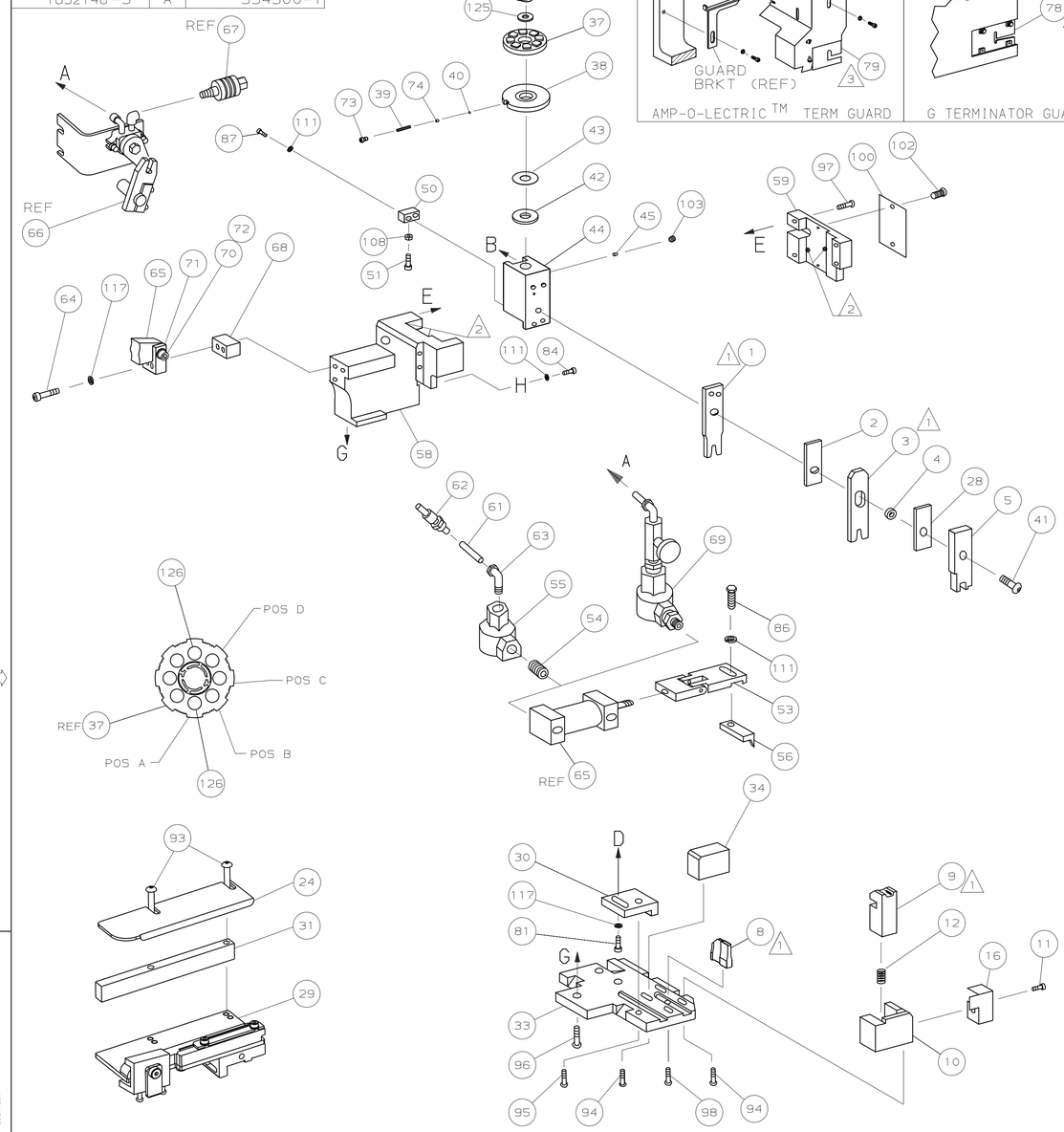

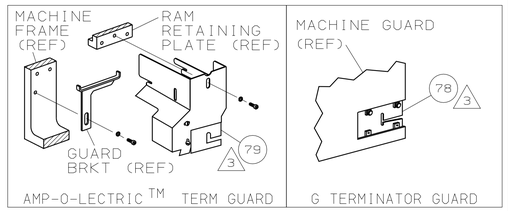

TERMINAL NAME: BLADE TYPE FEMALE

1-1438238-1

AMP TERMINAL	AMP CRIMP SPECS		
PAD LTR	CRIMP HEIGHT		WIRE SIZE
A	1.50 ±0.05mm [.059 ±.002]		18 AWG
B	NOT		USED
C	NOT		USED
D	NOT		USED
CRIMP	SIZE	TYPE	RANGE
WIRE	1.96mm [.077]	F	18 AWG
INSUL	2.95mm [.116]	F	Ø2.03mm MAX

WIRE STRIP LENGTH	TERM APPL SPEC	FEED	APPL INSTRUCTION	SET UP GAGE	LAYOUT
4.75-5.13mm	NONE	22.86mm	408-8040	458637-1	-

-3	-2	-1	U/M	DWG SIZE	PART NO	DESCRIPTION	ITEM NO
							129
							128
							127
2	2	2	-	C	354779-4	PIN, WIRE DISC (.3010)A	126
1	1	1	-	A	986950-1	WASHER, FLAT PRECISION	125
1	1	1	-	A	217238-1	GENERAL INSTRUCTION PACKAGE	124
1	1	1	-	-	4088040	SF APPL INST 408-8040	123
							122
							121
							120
							119
							118
3	3	3	-	A	21024-5	WASHER, LOCK(#10)ADJ BLOCK	117
							116
							115
							114
							113
							112
4	4	4	-	A	21024-4	WASHER,LOCK(#8)STRIPPER	111
							110
							109
1	1	1	-	A	21018-5	NUT,HEX(NO.6)HOLDDOWN	108
							107
							106
							105
							104
1	1	1	-	A	21009-2	SCR,SKT SET(1/4-20x.25 LW)RAM	103
2	2	2	-	A	21017-2	SCR,DRIVE(#2x.19)ID PLATE	102
							101
1	1	1	-	B	461264-1	PLATE, IDENTIFICATION	100
							99
1	1	1	-	A	22733-8	SCR,BHC(8-32x.38 LW)ANVIL	98
4	4	4	-	A	2-21002-9	SCR,BHC(10-32x.75)CAP	97
3	3	3	-	A	2-22733-8	SCR,BHC(1/4-20x.62)HSG	96
1	1	1	-	A	2-21002-7	SCR,BHC(10-32x.50)SG ADJ BLK	95
4	4	4	-	A	2-21002-2	SCR,BHC(8-32x.50)TERM H DWN	94
2	2	2	-	A	2-21002-4	SCR,BHC(8-32x.75)R STP GDE	93
							92
							91
							90
							89
							88
2	2	2	-	A	2-21000-7	SCR,SHC(8-32x.50)DEP-HOLD	87
1	1	1	-	A	2-22603-1	SCR,HEX HD(8-32x.38)FEED FINGER	86
							85
1	1	1	-	A	2-21000-7	SCR,SHC(8-32x.50)STRIPPER	84
							83
							82
1	1	1	-	A	3-21000-4	SCR,SHC(10-32x.38)SG ADJ BL	81
							80
2 -	1	-	-	B	462992-7	GUARD ASSY	79
3 REF	-	-	-	B	679532-1	INSERT, GUARD	78
							77
							76
							75
1	1	1	-	A	690603-1	SPRING, ASSIST	74
1	1	1	-	A	23030-1	SCR,SHC(6-32x.25 SL)INS DISC	73
1	1	1	-	A	3-21001-5	SCR,SHC(3/8x1.00)FEED MT	72
1	1	1	-	B	459610-3	MOUNT, FEED BRACKET	71

QTY REQD PER ASSY — PARTS LIST

-1	-2	-3	U/M	DWG SIZE	PART NO	DESCRIPTION	ITEM NO
LEADMAKER	BENCH MODEL K	BENCH MODEL G			AIRFEED	AIRFEED	AIRFEED
1	1	1	-	A	21024-8	WASHER,LOCK(3/8)FEED BRKT	70
4 -	1	-	-	C	692655-5	AIR FEED VALVE ASSY	69
1	1	1	-	A	461690-1	SPACER, AIR FEED	68
-	REF	-	-	A	24042-2	VALVE, SHUT OFF	67
4 -	REF	-	-	C	692655-6	AIR FEED VALVE ASSY	66
4 1	1	1	-	B	461065-2	AIR FEED ASSY (2 INCH)	65
2	2	2	-	A	4-21000-3	SCR,SHC(10-32x2.00)AIR ASSY	64
1	-	1	-	A	980285-2	ELBOW, SWIVEL 1/8 NPT - 1/4 T	63
1	-	1	-	A	23238-1	QUICK DISCONNECT	62
21.00	-	21.00	IN	A	27319-4	TUBING, POLY-FLO Ø.25	61
							60
1	1	1	-	C	454220-1	CAP, RAM	59
1	1	1	-	D	454485-1	HOUSING	58
							57
1	1	1	-	B	458537-2	PAWL, FEED	56
1	-	1	-	A	22374-7	VALVE, QUICK EXHAUST	55
1	-	1	-	A	22304-1	NIPPLE, HEX	54
4 1	1	1	-	B	461062-1	FEED FINGER ASSY	53
							52
1	1	1	-	A	811242-2	BUMPER, HOLDDOWN	51
1	1	1	-	A	690753-1	SPACER, TONKER	50
							49
							48
							47
							46
1	1	1	-	A	690191-1	PLUG, NYLON	45
1	1	1	-	C	455673-1	RAM	44
1	1	1	-	A	690125-1	WASHER, LAMINATED	43
1	1	1	-	A	690124-1	WASHER, RAM	42
1	1	1	-	A	7-21002-9	BOLT, CRIMPER(5/16x1.00)	41
1	1	1	-	A	23241-6	BALL, STEEL	40
1	1	1	-	A	690170-1	SPRING, COMPRESSION	39
1	1	1	-	C	690142-4	DISC, INSULATION	38
1	1	1	-	D	354777-1	DISC, WIRE	37
1	1	1	-	A	22480-5	WASHER, SPRING	36
1	1	1	-	B	690212-1	POST, RAM	35
1	1	1	-	B	690786-4	SUPPORT, TERMINAL	34
1	1	1	-	D	455675-1	PLATE, BASE	33
							32
1	1	1	-	B	1320908-8	SPACER, STRIP GUIDE	31
1	1	1	-	B	455689-1	BLOCK, STRIP GUIDE ADJ	30
1	1	1	-	C	1633091-7	STRIP GUIDE ASSEMBLY	29
1	1	1	-	C	1-455888-0	SPACER, FRONT SHEAR DEP	28
							27
							26
							25
1	1	1	-	D	1320928-3	GUIDE, STRIP (REAR)	24
							23
-	-	1	-	B	690472-2	STRIPPER	22
							21
							20
1	1	-	-	B	691353-1	STRIPPER	19
							18
							17
1	1	1	-	B	318563-1	GUARD, CHIP, FRONT	16
							15
							14
							13
1	1	1	-	A	5-22280-0	SPRING, SHEAR	12
1	1	1	-	B	690461-1	STOP, SHEAR	11
1	1	1	-	C	690459-1	HOLDER, SHEAR (FRONT)	10
1 1	1	1	-	C	1-454276-9	SHEAR, FLOAT (FRONT)	9
1 1	1	1	-	C	3-1633116-6	ANVIL	8
							7
							6
1	1	1	-	C	1-455889-4	DEPRESSOR, SHEAR (FRONT)	5
1	1	1	-	B	2-238011-2	SPACER, BLOCK CRIMPER	4
1 1	1	1	-	C	7-1424909-1	CRIMPER, INSULATION	3
1	1	1	-	C	1-455888-2	SPACER, CRIMPER	2
1 1	1	1	-	C	9-568176-7	CRIMPER, WIRE	1

QTY REQD PER ASSY — REVISION OF EACH ASSY NO (WHEN BLANK, USE DWG REVISION) — PARTS LIST

1 RECOMMENDED SPARE PARTS.

2 GREASE LIGHTLY.

3 GUARD MUST BE IN PLACE WHEN OPERATING APPLICATOR IN A BENCH MACHINE.

4 SEE DRAWING FOR COMPONENTS

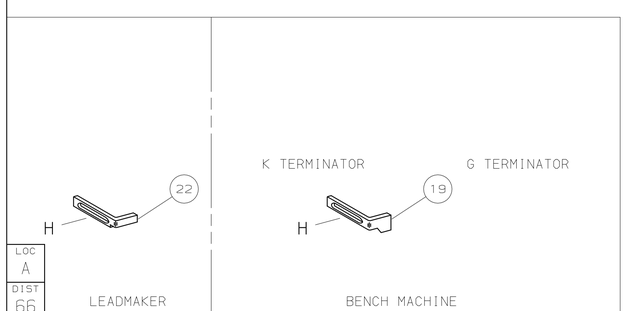

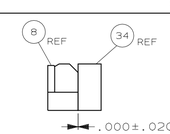

P	F	LTR	REVISION RECORD	APP	DATE
		A	RELEASED	RK	NOV05

DIMENSIONS IN INCHES.
DO NOT SCALE PRINT.
TOLERANCES UNLESS OTHERWISE SPECIFIED:
2 PLC DEC ±.25
3 PLC DEC ±-
4 PLC DEC ±-
ANGLES ± -
SURF TEXTURE: √
REMOVE BURRS, BREAK SHARP EDGES R.015 MAX

MATL - - | HT TR - - | FIN - -

DR 210CT05 R. KNEPPER | APP 210CT05 T.ELBIN
CHK 09NOV05 T.ELBIN | REL 09NOV05 R.KNEPPER

AMP — Tyco Electronics, Harrisburg, PA 17105-3608

NAME SIDE FEED HDM APPLICATOR | MACHINE REF MINI APPL
SCALE - | D | DWG NO 1852146 | SHEET 1 OF 1 | REV A

CAGE CODE 00779 | CUSTOMER AND ASSEMBLY DRAWING | RESTRICTED TO -

THIS DRAWING IS A CONTROLLED DOCUMENT.
RELEASED FOR PUBLICATION NOVEMBER 09,2005
© COPYRIGHT 2005 BY AMP INCORPORATED. ALL RIGHTS RESERVED.

LOC A | DIST 66