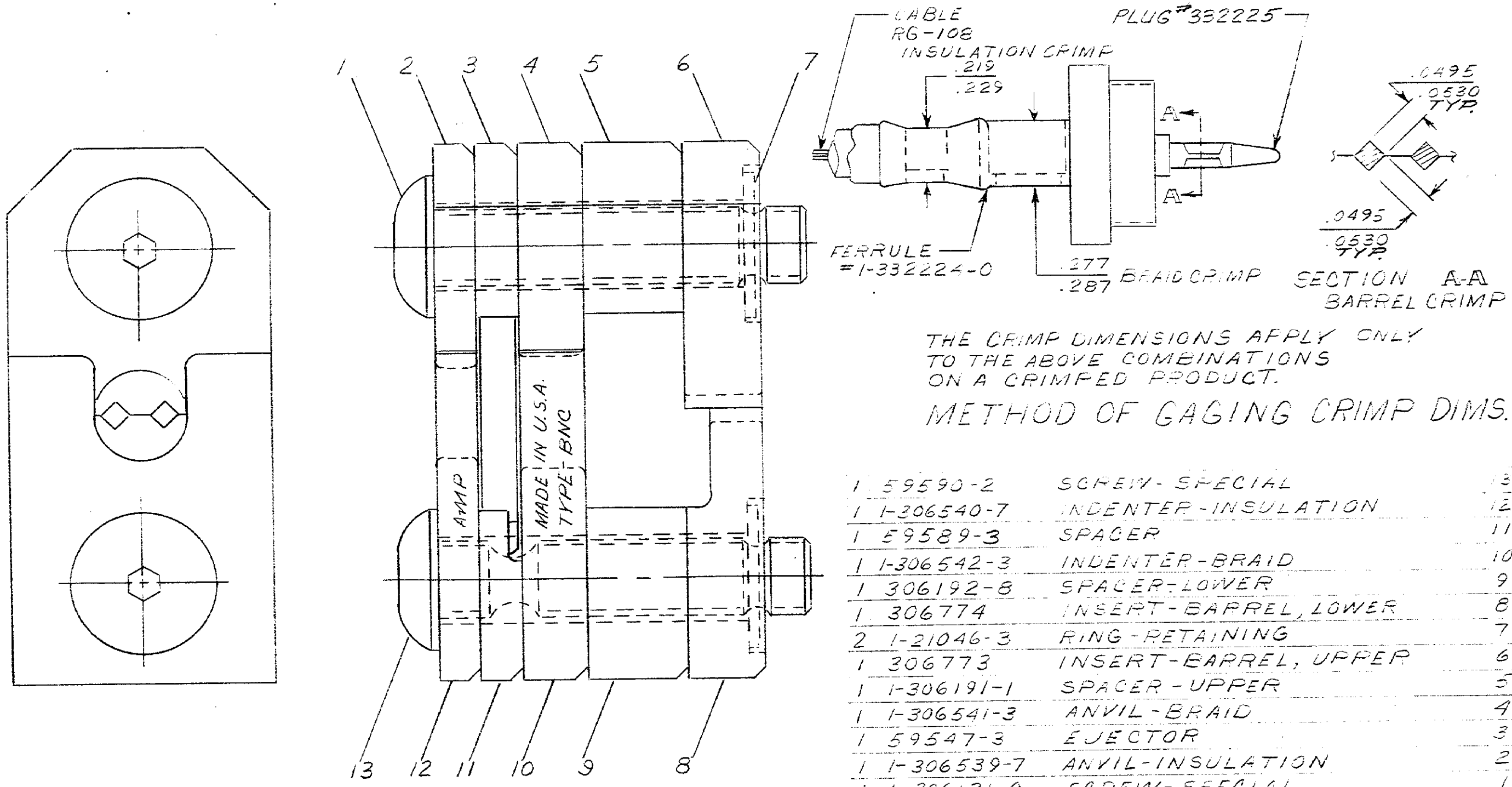

THE CRIMP DIMENSIONS APPLY ONLY TO THE ABOVE COMBINATIONS ON A CRIMPED PRODUCT.

METHOD OF GAGING CRIMP DIMS.

1	59590-2	SCREW-SPECIAL	13
1	1-306540-7	INDENTER-INSULATION	12
1	59589-3	SPACER	11
1	1-306542-3	INDENTER-BRAID	10
1	306192-8	SPACER-LOWER	9
1	306774	INSERT-BARREL, LOWER	8
2	1-21046-3	RING-RETAINING	7
1	306773	INSERT-BARREL, UPPER	6
1	1-306191-1	SPACER-UPPER	5
1	1-306541-3	ANVIL-BRAID	4
1	59547-3	EJECTOR	3
1	1-306539-7	ANVIL-INSULATION	2
1	1-306131-0	SCREW-SPECIAL	1

DWG SIZE	NUMBER	NAME	REMARKS	ITEM NO

©1966 BY AMP INCORPORATED. ALL RIGHTS RESERVED.
AMP PRODUCTS COVERED BY PATENTS AND/OR PATENTS PENDING.

CUSTOMER COPY REFERENCE ONLY

LTR	REVISION RECORD	DR	CHK	DATE
A	REVISED	B.S.		8-7-67

NUMBER 69708

REQUIRED PER ASSEMBLY

DESCRIPTION

69708

DR O.J. Flaynik 3-3-66

CHK R.J. Gregory 3-4-66

DE

R.J. Gregory 3-14-66

MATERIAL AND FINISH — " —

WIRE – RANGE – INSULATION RG-108 — " —

TOLERANCE EXCEPT AS NOTED ± .015 ± 1° 0'

SCALE 4-1

AMP INCORPORATED HARRISBURG, PENNA.

CLASS — " —

TYPE BNC COAXICON

LOC M | B | NO 69708 | REV A

NAME DIE ASSEMBLY

DIMENSIONS IN INCHES. DO NOT SCALE PRINT.

PRINT DIST 3 | A

AMP 1253 REV 7/60