MICRO SWITCH
FREEPORT, ILLINOIS, U.S.A.
A DIVISION OF HONEYWELL

FED. MFG. CODE 91929

SWITCH–BASIC

CATALOG LISTING
V3-115

CKB 1500

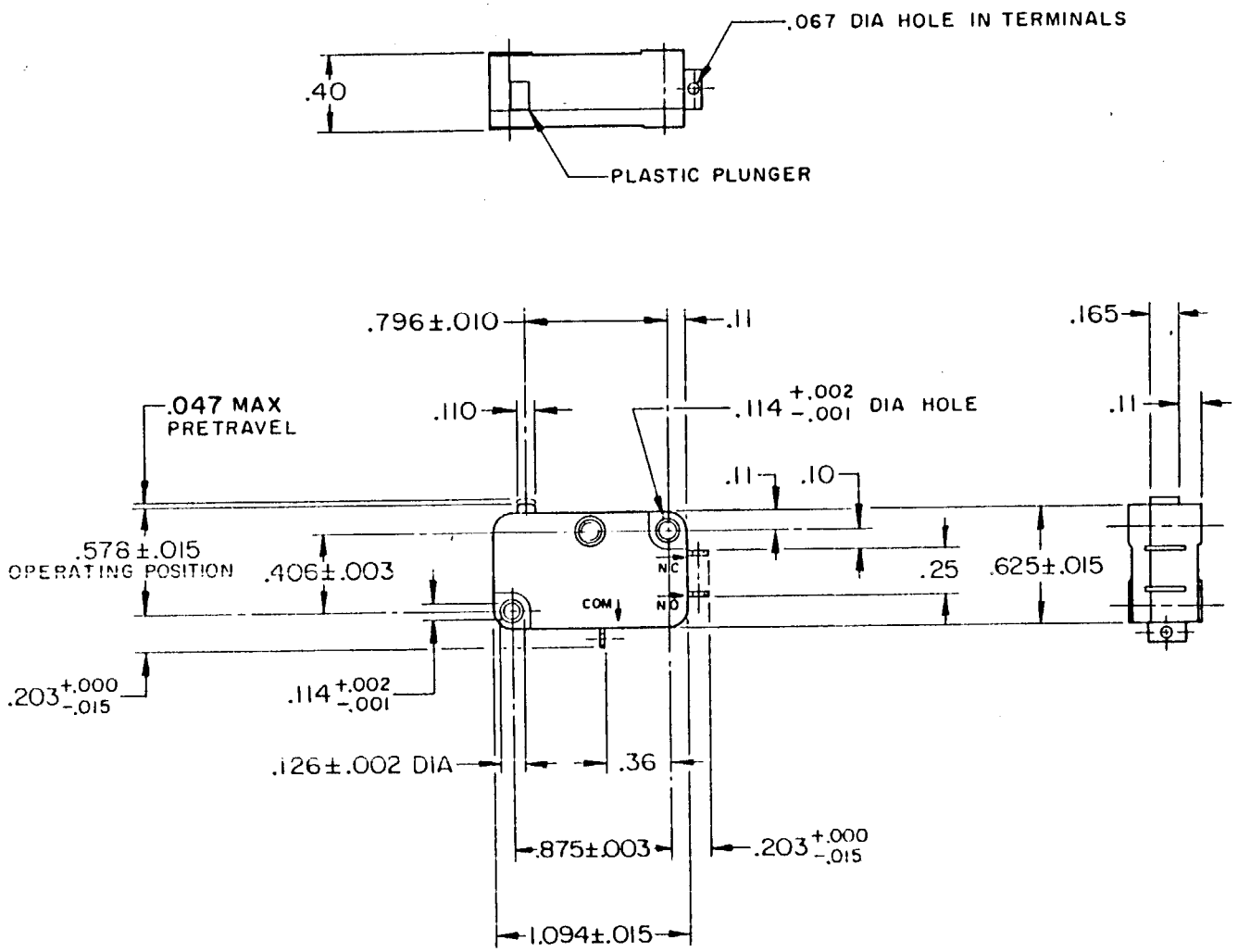

NOTE–
1 - TERMINALS ARE PLATED FOR SOLDERING

THIS DRAWING COVERS A PROPRIETARY ITEM AND IS THE PROPERTY OF MICRO SWITCH, A DIVISION OF HONEYWELL. THIS DRAWING IS NOT TO BE COPIED OR USED WITHOUT THE APPROVAL OF MICRO SWITCH.

CHARACTERISTICS

OPERATING FORCE - - - - - - - 8 OZ MAX

RELEASE FORCE - - - - - - - - 2 OZ MIN

DIFFERENTIAL TRAVEL - - - - -.006 –.016

OVERTRAVEL - - - - - - - - - -.040 MIN

FREE POSITION- - - - - - - - -.625 MAX

RELEASE TRAVEL- - - - - - - - - - -.007 MIN

ELECTRICAL DATA

CONTACT ARRANGEMENT
SPDT

– L156 – 11A–1/3HP–125–250–277 VAC
1/2A–125 VDC; 1/4A–250 VDC
4A–125 VAC "L"

SCALE FULL

DO NOT SCALE PRINT

UNLESS OTHERWISE NOTED
DIMENSIONS ARE IN INCHES

TOLERANCES ARE:

ONE PLACE	(.0)	±.030
TWO PLACE	(.00)	±.015
THREE PLACE	(.000)	±.005
ANGLES		±

WEIGHT .016 LB

DRAWN	WEG	28 JUNE 65	
CHECK	LSD	6 AUG 65	
CHECK			
CHECK			

REPLACES

RELEASE NO.

DRAWING NUMBER M V3-115

ISSUE X X 9 X

REVISIONS

A	C020189	WEG 28 JUNE 65	LSD 6 AUG 65
B	C021900	OMW OCT 66	LSD 6 AUG 65
C	C031748	LSD 3 APR 73	LSD 6 AUG 65
D	59921	SMA 29 SEPT 86	
E	C074475	KDR 15 APR 93	

-50378