PART NUMBER	ITEM ① BODY	ITEM ② CONTACT	ITEM ③ INSULATOR
142-1701-631	BRASS GOLD PL .00001 MIN OVER NICKEL PL .00005 MIN OVER COPPER PL .00005 MIN	BERYLLIUM COPPER GOLD PL .00005 MIN OVER NICKEL PL .00005 MIN OVER COPPER PL .00005 MIN	TEFLON
142-1701-636	BRASS NICKEL PL .0001 MIN OVER COPPER PL .00005 MIN	BERYLLIUM COPPER GOLD PL .00005 MIN OVER NICKEL PL .00005 MIN OVER COPPER PL .00005 MIN	TEFLON

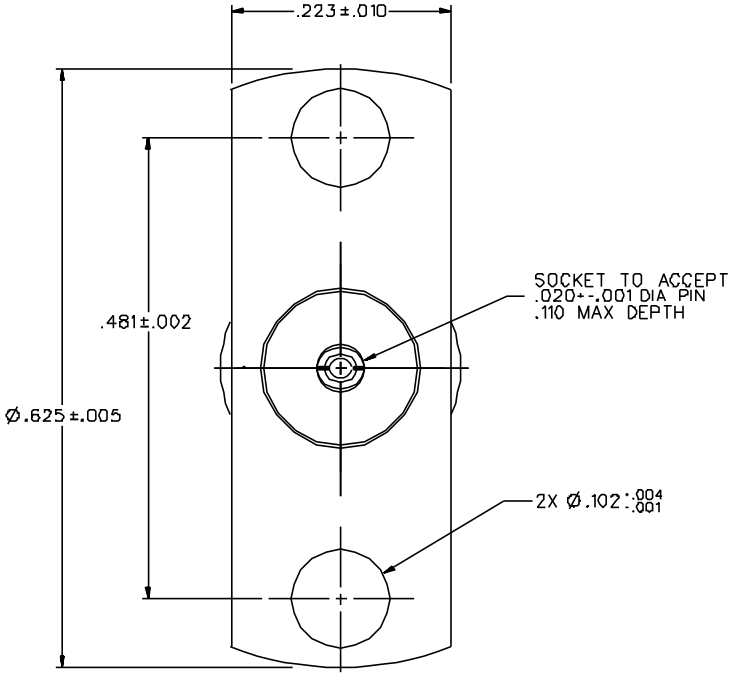

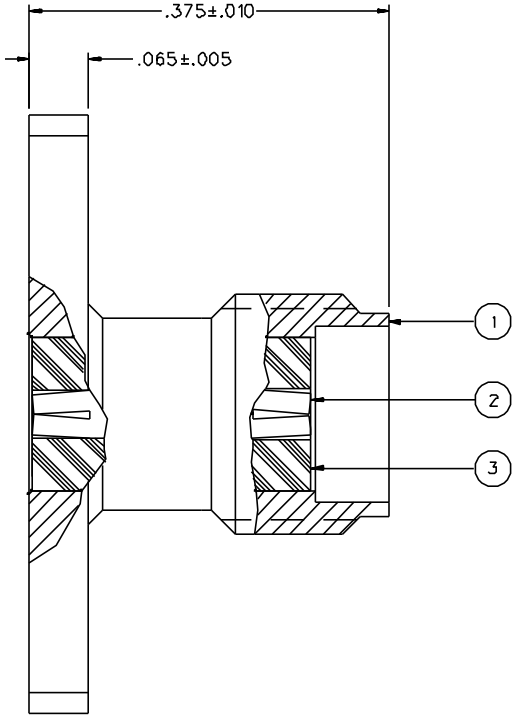

NOTES:

1. SPECIFICATIONS:

IMPEDANCE: 50 OHMS
FREQUENCY RANGE: 0-26.5 GHz
VSWR: DEPENDENT UPON APPLICATION, TYPICALLY < 1.1 + .01F (F IN GHz)
WORKING VOLTAGE: 335 VRMS MAX AT SEA LEVEL
DIELECTRIC WITHSTANDING VOLTAGE: 1000 VRMS MIN AT SEA LEVEL
INSULATION RESISTANCE: 5000 MEGOHM MIN
CONTACT RESISTANCE:
CENTER CONTACT - INITIAL 6.0 MILLIOHM MAX, AFTER ENVIRONMENTAL 8.0 MILLIOHM MAX
OUTER CONDUCTOR - INITIAL 2.0 MILLIOHM MAX AFTER ENVIRONMENTAL NOT APPLICABLE
BRAID TO BODY - NOT APPLICABLE
CORONA LEVEL: 250 VOLTS MIN AT 70,000 FEET
INSERTION LOSS: DEPENDENT UPON APPLICATION, TYPICALLY < .06√F dB (F IN GHz)
RF LEAKAGE: -70 dB MIN AT 2.5 GHz
RF HIGH POTENTIAL WITHSTANDING VOLTAGE: 670 VRMS MIN AT 4 AND 7 MHz

MECHANICAL:

ENGAGE/DISENGAGE TORQUE: 2 INCH-POUNDS MAX
MATING TORQUE: 7-10 INCH POUNDS
COUPLING PROOF TORQUE: NOT APPLICABLE
COUPLING NUT RETENTION: NOT APPLICABLE
CONTACT RETENTION: 6 LBS MIN AXIAL FORCE
CABLE ACCEPTABILITY: NOT APPLICABLE
CABLE HEX CRIMP SIZE: NOT APPLICABLE
CABLE RETENTION: NOT APPLICABLE
DURABILITY: 500 CYCLES MIN

ENVIRONMENTAL:

(MEETS OR EXCEEDS THE APPLICABLE PARAGRAPH OF MIL-C-39012)
THERMAL SHOCK: MIL-STD-202, METHOD 107, CONDITION B
OPERATING TEMPERATURE: -65 DEG C TO 165 DEG C
CORROSION: MIL-STD-202, METHOD 101, CONDITION B
SHOCK: MIL-STD-202, METHOD 213, CONDITION I
VIBRATION: MIL-STD-202, METHOD 204, CONDITION D
MOISTURE RESISTANCE: MIL-STD-202, METHOD 106

DRAWING NO.
C 142-1701-631/640

0	REVISIONS			
ENGINEERING RELEASE				
1	7-26-95	RH	JRK JRK JRK JRH	8-1-95 ECN 43586
VERSION UPDATE				
1a	12-21-95	RH	JRK JRK JRH	1-5-96 ECN 43858
VERSION UPDATE				
1b	8-26-96	RH	JRK JRK JRB	ECN 44157

* REVISION NUMBER FOLLOWED BY AN ALPHA CHARACTER INDICATES DRAWING CLARIFICATION OR PART NUMBER ADDITION ONLY. *

CUSTOMER DRAWING

THIS DRAWING TO BE INTERPRETED PER ANSI Y 14.5M - 1982

"μSTATION"

COMPANY CONFIDENTIAL

TOLERANCE UNLESS OTHERWISE SPECIFIED		DRAWN BY JRK	DATE 5-30-95	JOHNSON a cinch connectivity solutions brand	Cinch Connectivity Solutions 299 Johnson Ave. Ste. 100 Waseca, MN 56093 1-800-247-8256
DECIMALS .XX	mm	CHECKED BY JRK	DATE 7-26-95	TITLE ASSY, JACK, 2 HOLE FLANGE MOUNT, FLANGE SOCKET .020, FIELD REPLACEABLE SMA	
.XXX		APPROVED BY TAK	DATE 7-28-95		
MATL		APPROVED BY RJB	DATE 7-31-95	CODE NO.	DRAWING NO. C - 142-1701-631/640
FINISH		RELEASE DATE 8-1-95		SCALE 10:1	U/M INCH SHEET 2 OF 2