THIS DRAWING IS UNPUBLISHED. RELEASED FOR PUBLICATION -,- .
© COPYRIGHT - BY TYCO ELECTRONICS CORPORATION. ALL INTERNATIONAL RIGHTS RESERVED.

LOC	DIST
A	66

REVISIONS

P	LTR	DESCRIPTION	DATE	DWN	APVD
	B	ECR-09-009081	4-2009	MY	GB

PART NUMBER	REV	FIRST USED	TERMINATOR	FEED TYPE	DESCRIPTION
1339643-1	B	-	BENCH & LEADMAKER	MECH POST FEED	HD-I APPLICATOR
7-1339643-1	B	-	BENCH & LEADMAKER	MECH POST FEED	-1 AND SPARE PARTS
7-1339643-7	A	-	-	-	SPARE PARTS KIT

CRIMP DATA AMP TERMINAL AMP CRIMP SPECS

TERMINAL NAME: RING TONGUE

CRIMP	SIZE	TYPE	RANGE
WIRE	3.05 [.120 IN]	F	18-14 AWG OR 1.00-2.00mm²
INSUL	-	-	-

WIRE STRIP LENGTH 4.39-5.16 [.173-.203 IN]

APPL INSTRUCTION 408-8323

TERMINAL APPL SPEC 114-2084 △4 - -

FEED 14.17[.558 IN]

TERMINALS APPLIED

41346	41521	-	-	-
34812	41461	-	-	-
34839	-	-	-	-
34848	-	-	-	-
40593	-	-	-	-
40594	-	-	-	-
40595	-	-	-	-
40979	-	-	-	-

WIRE SIZE mm² AWG	CRIMP HEIGHT	PIN PN AND LENGTH [IN]
14 AWG OR 2mm²	1.90 ±0.05 [.075 ±.002 IN]	8-354778-3 [.2910]
16 AWG	1.70 ±0.05 [.067 ±.002 IN]	9-354778-9 [.2990]
18 AWG OR 1mm²	1.57 ±0.05 [.062 ±.002 IN]	1-354779-0 [.3040]
-	-	-
-	-	-
-	-	-
-	-	-
-	-	-
-	-	-
-	-	-
-	-	-
-	-	-
-	-	-
-	-	-

SET UP GAGE	LAYOUT
458638-3	L1339643

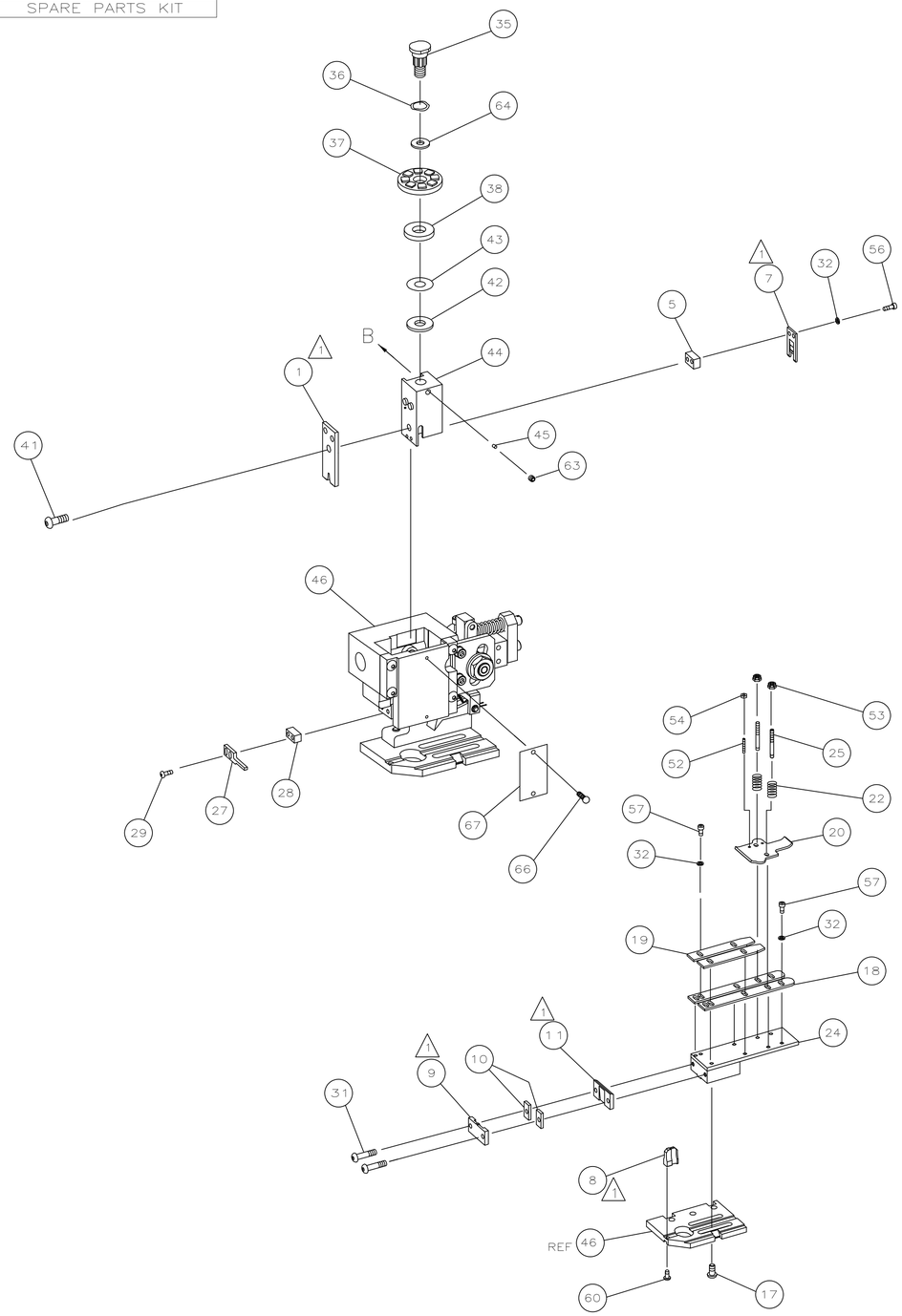

1. RECOMMENDED SPARE PARTS.
2. GREASE RAM, CAM, CAM FOLLOWER AND FEED ROD LIGHTLY.
3. LUBRICATE DAILY PER THE APPLICATOR INSTRUCTION SHEET SUPPLIED WITH THE APPLICATOR.

△4 TENSILE VALUES REQUIRED ARE :-
14 AWG = 50LBS
16 AWG = 30LBS
18 AWG = 20LBS

VIEW B ROTATED 180°

POST-FEED 40 mm STROKE

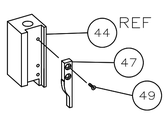

LEADMAKER OR BENCH G

POST-FEED 30 mm STROKE

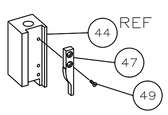

K TERMINATOR BENCH MACHINE

-	1	1	1339643	PRINT, APPLICATOR LOG SHEET	72
-	1	1	1338705-2	DOCUMENTATION PACKAGE	71
					70
					69
					68
-	1	1	461264-1	PLATE, IDENTIFICATION	67
-	2	2	21017-2	SCR,DRIVE(#2X.19)ID PLATE	66
					65
-	1	1	986950-1	WASHER, FLAT PRECISION	64
-	1	1	3-18031-0	SCR,SKT SET(M6X6)RAM	63
					62
					61
-	1	1	18024-7	SCR,BHC(M4X10)ANVIL	60
					59
					58
-	6	6	18023-9	SCR,SHC(M4X6)STRIP GUIDE	57
-	2	2	1-18023-1	SCR,SHC(M4X10)SLUG BLADE	56
					55
-	2	2	18029-1	NUT,HEX(M3)DRAG	54
-	2	2	986965-1	NUT,HEX SL(M4)DRAG STUD	53
-	2	2	2-18032-2	SCR,SKT SET(M3X10)DRAG	52
					51
					50
-	1	1	18024-3	SCR,BHC(M3X10)CAM	49
					48
-	1	1	1338676-1	CAM, POST-FEED 30 & 40 mm ST	47
-	1	1	1338662-1	APPLICATOR, BASIC (SUBASSY)	46
-	1	1	690191-1	PLUG, NYLON	45
-	1	1	1320998-1	RAM	44
-	1	1	690125-1	WASHER, LAMINATED	43
-	1	1	690124-1	WASHER, RAM	42
-	1	1	2-18024-6	SCREW,BHC(M8X25)CRIMPER	41
					40
					39
-	1	1	690223-2	SPACER, INSULATION DISC	38
-	1	1	354777-1	WIRE DISC, PLASTIC	37
-	1	1	22480-5	WASHER, SPRING	36
-	1	1	690212-1	POST, RAM	35
					34
					33
-	8	8	18025-2	WASHER,LOCK(M4)SHEAR BL	32
-	2	2	1-18024-0	SCR,BHC(M4X20)SHEAR PL	31
					30
-	2	2	18024-8	SCR,BHC(M4X12)STRIPPER	29
-	1	1	3-690451-2	SPACER, STRIPPER	28
-	1	1	240639-1	STRIPPER	27
					26
-	2	2	1320906-1	DRAG, STUD	25
-	1	1	1320995-2	STRIP GUIDE	24
					23
-	2	2	4-22281-1	SPRING, DRAG	22
					21
-	1	1	1338665-1	DRAG, STOCK	20
-	2	2	1338664-1	GUIDE, UPPER STRIP	19
-	2	2	1338663-1	GUIDE, LOWER STRIP	18
-	4	4	1-18024-8	SCR,BHC(M6X12)STRIP GD PL	17
					16
					15
					14
					13
					12
△1 -	1	1	691901-2	PLATE, REAR SHEAR	11
-	2	2	1-240645-6	SPACER, SHEAR PLATE	10
-	1	1	240642-3	PLATE, FRONT SHEAR	9
△1 1	2	1	1333224-5	ANVIL	8
-	1	1	691157-5	BLADE, SLUG	7
					6
-	1	1	240641-5	SPACER, SLUG BLADE	5
					4
					3
					2
△1 1	2	1	456409-3	CRIMPER, WIRE	1
-77	-71	-1	PART NO	DESCRIPTION	ITEM NO
QTY REQD PER ASSY			PARTS LIST		

THIS DRAWING IS A CONTROLLED DOCUMENT.

DIMENSIONS: INCHES

TOLERANCES UNLESS OTHERWISE SPECIFIED:
0 PLC ± -
1 PLC ± -
2 PLC ± -
3 PLC ± -
4 PLC ± -
ANGLES ± -

MATERIAL -
FINISH -

DWN L.LOFTHOUSE 16MAY02
CHK -
APVD F.BACKHURST 16MAY02
PRODUCT SPEC -
APPLICATION SPEC -
WEIGHT -

Tyco Electronics
Tyco Electronics Corporation
Harrisburg, PA 17105-3608

NAME END FEED HD-I APPLICATOR

SIZE	CAGE CODE	DRAWING NO	RESTRICTED TO
A1	00779	C-1339643	-

CUSTOMER DRAWING SCALE - SHEET 1 OF 1 REV B

4805 (1/08)

21APR2009 10:11am