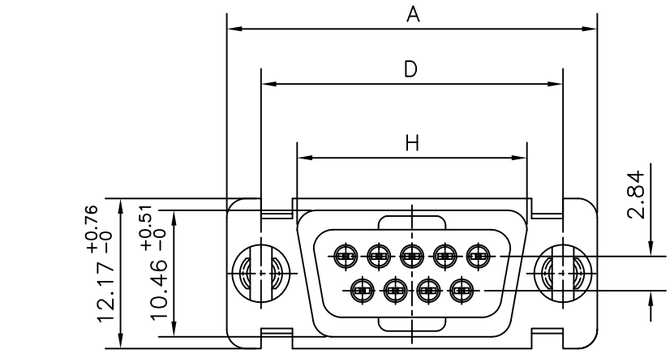

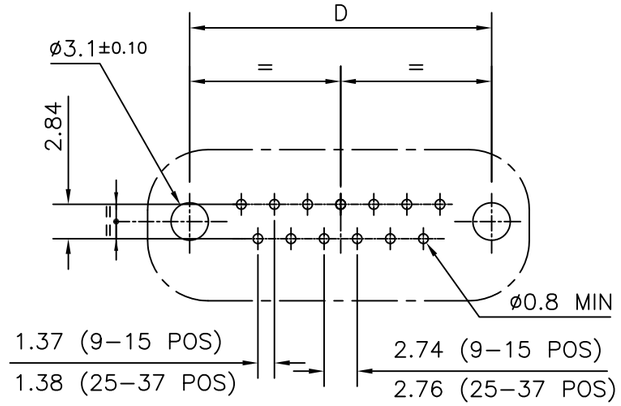

PCB DRILLING DETAIL

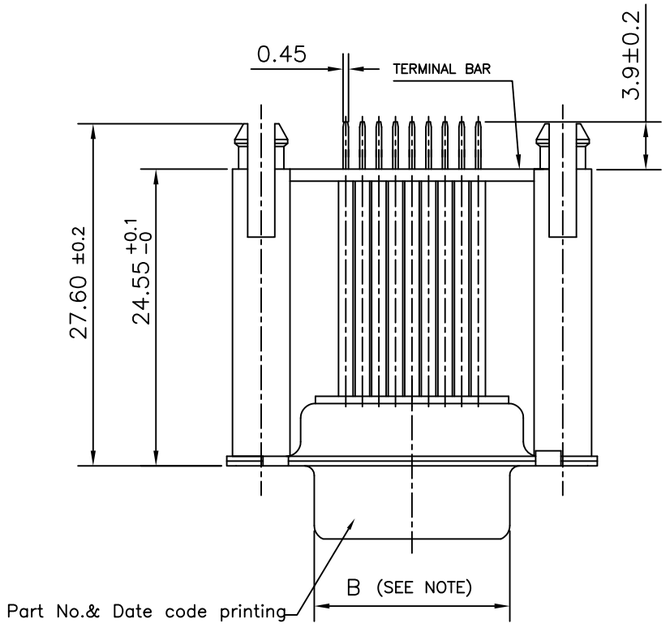

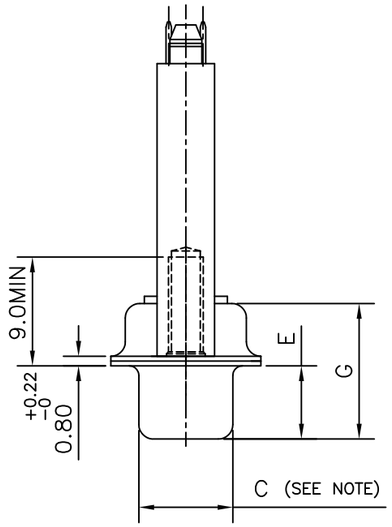

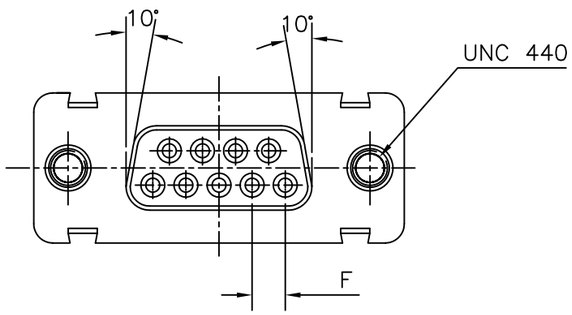

VIEW OF MATING FACE

NOTE – 1. INSIDE DIMENSIONS OF MALE AND OUT SIDE DIMENSIONS OF THE FEMALE CONNECTOR.

37	P	68.94	55.30	8.23	63.50	5.85	2.76	11.09	57.45
	S	68.94	54.71	7.77	63.50	6.05	2.76	11.21	57.45
25	P	52.65	38.84	8.23	47.04	5.85	2.76	11.07	41.02
	S	52.65	38.25	7.77	47.04	6.05	2.76	11.21	41.02
15	P	38.76	25.12	8.23	33.32	5.85	2.74	10.99	27.25
	S	38.76	24.54	7.77	33.32	6.05	2.74	11.21	27.25
09	P	30.43	16.79	8.23	24.99	5.85	2.74	10.99	19.02
	S	30.43	16.21	7.77	24.99	6.05	2.74	11.21	19.02
SHELL SIZE		A +0.76 0	B +0.25 0	C +0.25 0	D +0.12 0	E +0.15 0	F	G Max.	H +0.51 0

TECHNICAL SPECIFICATIONS

SHELLS	: TIN / ZINC PLATED STEEL.
INSULATOR MATERIAL	: SELF EXTINGUISHING THERMOPLASTIC- TO UL CLASS 94 V0 THE HOUSING WILL WITHSTAND EXPOSURE TO 260-265°C IF WE USE PROTECTIVE ADHESIVE (type Kapton or Teflon) OR PROTECTIVE METALLIC DEVICE
CONTACTS DIA ON ACTIVE AREA	: Ø1 MM.
CONTACT MATERIAL	: COPPER ALLOY
CONTACT PLATING	: GOLD / GXT OVER NICKEL(ACTIVE ZONE)
FOR LEAD FREE PLATING	: TIN OVER NICKEL(TERMINATION ZONE) 2 MIN.MATTE TIN TOP OVER 1.27 MIN.NICKEL UNDER PLATE(ON TERMINATION ZONE)
OPERATING TEMPERATURE	: -55°C +125°C
OPERATING CURRENT	: 5 A PER CONTACT
CONTACT RESISTANCE	: ⩽ 25mΩ
INSULATION RESISTANCE	: ⩾ 5000 MΩ
TEST VOLTAGE	: 1000 V.r.m.s
MECHANICAL ENDURANCE	: 500 MATINGS .
DAMP HEAT	: 21 DAYS.
TORQUE	: 0.6 ~ 0.7 N-m

D E O 09 S 3 65 GT 102 LF

- SERIES
- SHELL SIZE E,A,B,C
- NO.OF CONTACTS 09,15,25,37
- CONTACTS P – PIN S – SOCKET
- CONTACT PLATING 0.76μ GOLD / GXT
- SPECIAL CODE SPL. BOARD LOCK
- LEAD FREE

"This LF product meets European Union Directives and other country regulations as described in GS–22–008"

The housing will withstand exposure to 260°C peak temperature for3.5 seconds in a wave solder application with a 1.6mm minimum thick circuit board.

Packaging as per GS–14–920

mat'l. code				surface	tolerance	projection	product family
SEE.NOTES				ISO 1302	ISO 406 ISO 1101		
ltr	ecn no	dr	date	tolerances unless otherwise specified			title
E	i06-0074	GVJ	2006/06/08	angles	linear	MM	D SUB FEMALE S/S CONNECTOR (WITH BOARD LOCK)
F	I11-0003	AMR	2011-01-06				
						scale –	
				dr	Mini K Vandanath 2003/02/10		dwg no C-DSUB-0139 sheet 1 of 1 size A3
				engr	George V Joseph 2003/02/10		
				chr	Abhilash M R 2011-01-06		
				appd	Sudhir Varma 2011-01-06		type Product Customer Drawing
sheet index	revision sheet	F 1					

FCIconnect.com
Copyright FCI

form: A3

PDM: Rev:F STATUS:Released Printed: Mar 05, 2011