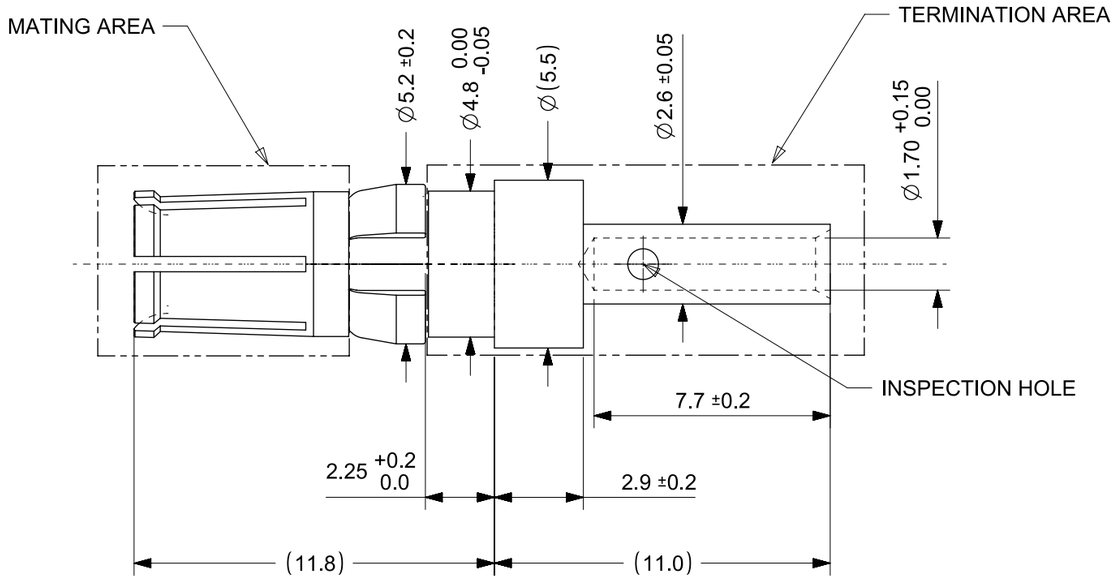

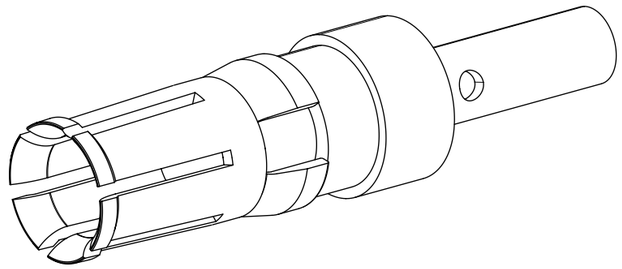

NOTES:
1.MATERIAL: COPPER ALLOY
2.PLATING-
MATING AREA: 0.1µm MIN. Au over 2µm MIN. NiP
TERMINATION AREA: 0.2µm MIN. Au over 2µm MIN. Ni
3.PRODUCT SPECIFICATION:
CIRCULAR CONNECTOR: 2009140003 PS
INLINE CONNECTOR: 2018400030 PS
4.APPLICATION SPECIFICATION: 2009140003-AS (CIRCULAR CONNECTOR)
5.PACKAGING SPECIFICATION: 2018460001 PDD PK
6.MATES WITH THE TERMINAL SERIES 201845
7.USED WITH HOUSING SERIES 200915/ 201841
8.A)MAXIMUM ALLOWED OVERALL WIRE DIAMETER IS 6.50MM FOR SERIES 201841
B)MAXIMUM ALLOWED OVERALL WIRE DIAMETER IS 5.50MM FOR SERIES 200915
9.DIMENSIONS IN BRACKETS ARE REFERENCE ONLY
10.CRIMPING TOOL DETAILS
FCT TOOLS
HAND TOOL: M309
PNEUMATIC CRIMP TOOL: WA27-309
DIE: SP994
SELECTOR NUMBER:
AWG 16/ SEL. 3
AWG 18/ SEL. 2

RoHS compliant by exemption 6(c)

CRIMP DETAILS

-FOR STRIP LENGTH CONSIDER ESTABLISHED TECHNICAL CRIMP SPECIFICATION, FOR EXAMPLE IPC/WHMA-A-620.
-IN ADDITION KEEP CLEARANCE 'C' BETWEEN INSULATION AND CONTACT BARREL LESS THAN 50% OF OVERALL WIRE O.D.,WITH A RECOMMENDATION OF MAX. 1MM CLEARANCE C.
-PUSH STRIPPED WIRES INTO TERMINAL UP TO STOP.
-AFTER CRIMPING CHECK IF STRIPPED WIRES ARE VISIBLE IN INSPECTION HOLE.

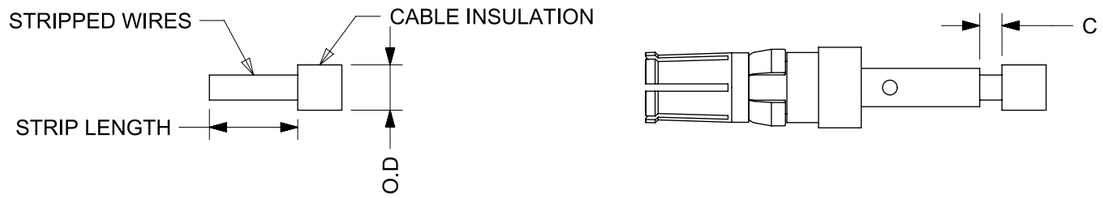

RELEASE STATUS	P1	RELEASE DATE	13.12.2016 08:08:25

FORMAT: master-tb-prod-A3
REVISION: G
DATE: 2015/12/14

QUALITY SYMBOLS: FA = 0; FC = 0; FP = 0; ▼ = 0; C = 0; ☒ = 0; ■ = 0; C = 0

THIS DRAWING CONTAINS INFORMATION THAT IS PROPRIETARY TO MOLEX ELECTRONIC TECHNOLOGIES, LLC AND SHOULD NOT BE USED WITHOUT WRITTEN PERMISSION

DRAWING UPDATE
EC NO: 111695 2016/12/19
DRWN: MRAMAKRISHNA
CHK'D:
APPR: ISHWARG 2016/12/20
A1 REV

GENERAL TOLERANCES (UNLESS SPECIFIED)
ANGULAR TOL ± °
4 PLACES ±
3 PLACES ±
2 PLACES ± 0.13
1 PLACE ± 0.25
0 PLACES ±
DRAFT WHERE APPLICABLE MUST REMAIN WITHIN DIMENSIONS

DIMENSION UNITS: MM
SCALE: 5:1
DRWN BY: MRAMAKRISHNA DATE: 2016/04/01
CHK'D BY: MRAMAKRISHNA DATE: 2016/04/25
APPR BY: ISHWARG DATE: 2016/12/13
DRAWING SIZE: A3
THIRD ANGLE PROJECTION

molex®

MULTICAT FEMALE CRP CONTACT 10A 16-18AWG

PRODUCT CUSTOMER DRAWING

SERIES	MATERIAL NUMBER	CUSTOMER
201846	2018460010	GENERAL MARKET

DOCUMENT NUMBER	DOC TYPE	DOC PART	SHEET NUMBER
2018460010	PSD	000	1 OF 1