4715RL (120□ x 38L)

General Specifications

Motor Protection:
Auto Restart/Polarity Protection

Insulation Resistance:
10M Ω or over with a DC500V Megger

Dielectric Withstand Voltage: AC 700V 1s

Allowable Ambient Temperature Range:
-10°C ~ +60°C (Operating)
-40°C ~ +60°C (Storage)
(non-condensing environment)

Expected Life

Failure Rate: 10%
25°C 80,000 Hours (E00)

Outline

Units: inch (mm)

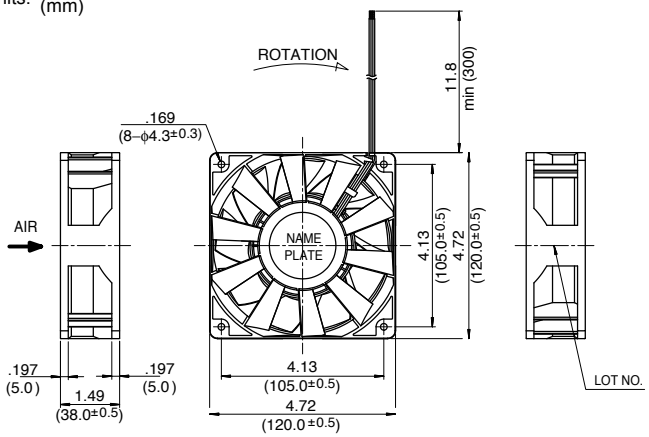

Characteristic Curves

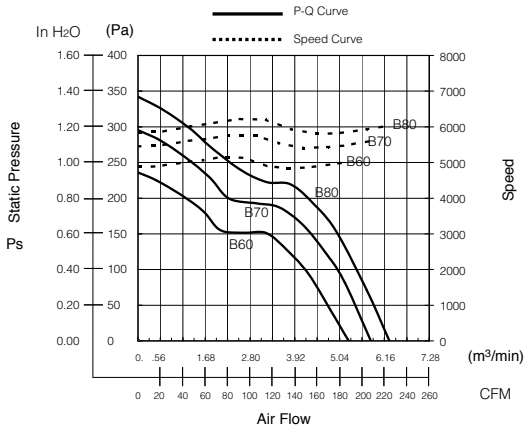

Panel Cut-outs

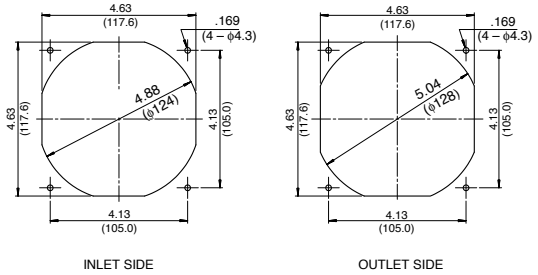

Material

Casing : Plastic (Black) 94V-0
Impeller : Plastic (Black) 94V-0
Bearing : Ball Bearing
Lead Wire : UL1007, AWG24, +Red, -Black

Specifications

MODEL	Product No.	Rated Voltage (V)	Operating Voltage (V)	Current (A)*1	Input Power (W)*1	Speed (min⁻¹)*1	Max. Air Flow CFM*1	Max. Air Flow (m³/min)*1	Max. Static Pressure in H2O	Max. Static Pressure (Pa)*1	Noise (dB)*1	Mass (g)
4715RL-05W-**B60**-	EXX	24	18.0 ~ 27.6	1.00	24.00	5000	188.2	5.30	0.94	235	62.0	370
4715RL-05W-**B70**-	EXX	24	18.0 ~ 27.6	1.50	36.00	5600	208.0	5.80	1.18	290	65.0	370
4715RL-05W-**B80**-	EXX	24	18.0 ~ 27.6	1.80	43.20	6000	224.6	6.36	1.37	340	66.5	370
4715RL-07W-**B60**-	EXX	48	40.0 ~ 55.2	0.55	26.40	5000	188.2	5.30	0.94	235	62.0	370
4715RL-07W-**B70**-	EXX	48	40.0 ~ 55.2	0.70	33.60	5600	208.0	5.80	1.18	290	65.0	370
4715RL-07W-**B80**-	EXX	48	40.0 ~ 55.0	0.90	43.20	6000	224.6	6.36	1.37	340	66.5	370

Rotation: Clockwise Airflow Outlet: Air Out Over Struts *1: Average Values in Free Air