THIS DRAWING IS UNPUBLISHED. RELEASED FOR PUBLICATION -,- .
© COPYRIGHT - BY TYCO ELECTRONICS CORPORATION. ALL RIGHTS RESERVED.

LOC	DIST
DW	—

REVISIONS

P	LTR	DESCRIPTION	DATE	DWN	APVD
	C	REVISED (ECO-11-013077)	23JUN11	JC	WK

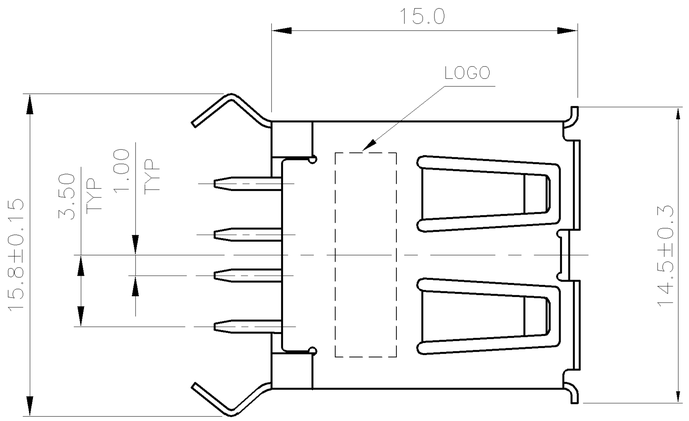

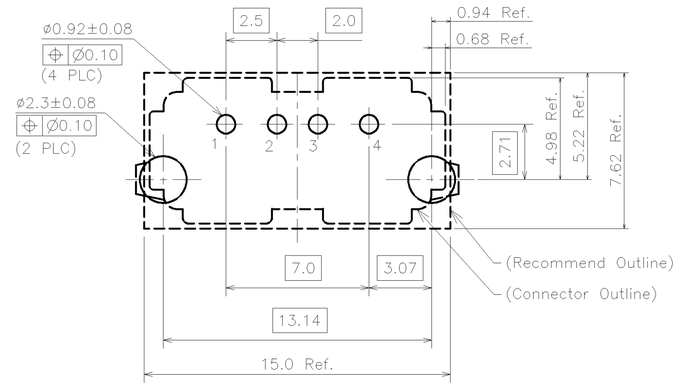

RECOMMENDED P.C.BOARD LAYOUT(T=1.6)
(TOP VIEW)(TOLERANCE:±0.05)

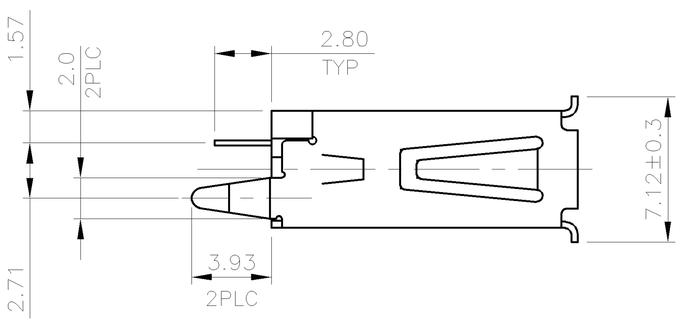

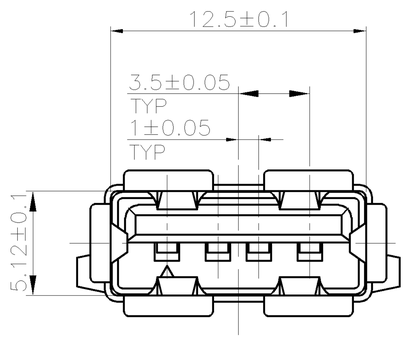

NOTE:

1. MATERIAL:
   HOUSING: THERMOPLASTIC(PBT), UL 94V-0, COLOR:SEE TABLE.
   CONTACTS: PHOSPHOR BRONZE. THICKNESS=0.25
   SHELL: BRASS. THICKNESS=0.30

2. FINISH:
   CONTACTS: GOLD FLASH OVER
   0.762μm [30μ"] MIN. PALLADIUM-NICKEL PLATED ON CONTACT AREA,
   2.54μm [100μ"] MIN. MATTE-TIN ON SOLDER TAILS,
   1.27μm [50μ"] MIN. NICKEL. UNDERPLATED ALL OVER.
   SHELL: 2.54μm [100μ"] MIN. TIN PLATED OVER
   1.27μm [50μ"] MIN. NICKEL UNDERPLATED

3. WAVE SOLDER CAPABLE TO 265°C PER TEST SPEC.
   109-202, CONDITION B.

4. HOUSING MIGHT BE MELTED AFTER DIFFERENT CUSTOMER WAVE SOLDERING PROCESS.

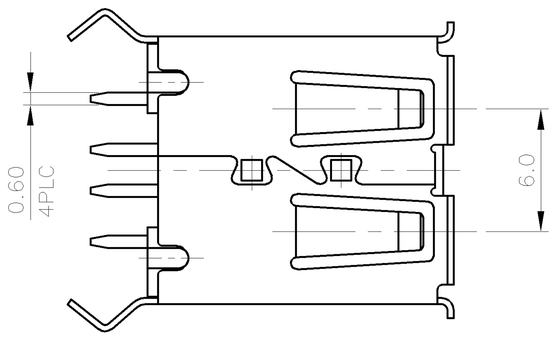

SEE SHEET 3	BLACK	1734366-4
	BLUE	1734366-3
SEE SHEET 2	WHITE	1734366-2
	BLACK	1734366-1
PACKING	HSG'S COLOR	PART NUMBER

THIS DRAWING IS A CONTROLLED DOCUMENT.

DIMENSIONS: MM

TOLERANCES UNLESS OTHERWISE SPECIFIED:

0 PLC	± 0.38
1 PLC	± 0.25
2 PLC	± 0.13
3 PLC	± 0.05
4 PLC	± -
ANGLES	± 2°

MATERIAL: SEE NOTE

FINISH: SEE NOTE

DWN S. CHIEN 19SEP2008
CHK S. CHIEN 19SEP2008
APVD W. KODAMA 19SEP2008
PRODUCT SPEC 108-57547
QUALIFICATION TEST REPORT 501-57635
WEIGHT 1.82GRAMS

TE Connectivity

NAME: RECEPT ASSY, VERTICAL, 4POSITION THRU-HOLE, TYPE A USB

SIZE	CAGE CODE	DRAWING NO	RESTRICTED TO
A3	00779	C-1734366	

CUSTOMER DRAWING | SCALE — | SHEET 1 OF 3 | REV C

THIS DRAWING IS UNPUBLISHED. RELEASED FOR PUBLICATION -,- .
© COPYRIGHT - BY TYCO ELECTRONICS CORPORATION. ALL RIGHTS RESERVED.

LOC	DIST
DW	—

REVISIONS

P	LTR	DESCRIPTION	DATE	DWN	APVD
		SEE SHEET 1.			

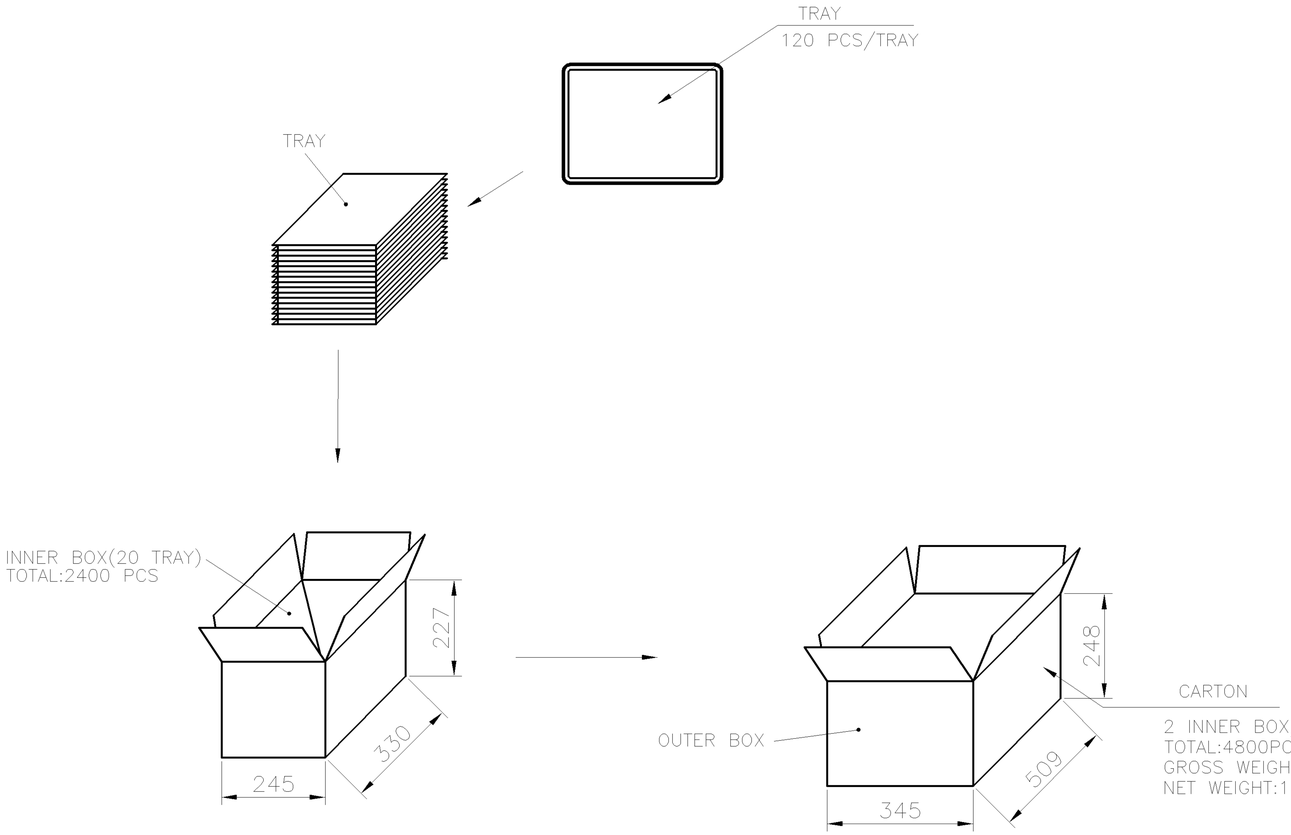

USE THE TAPE TO FIX THE TRAY(4X)

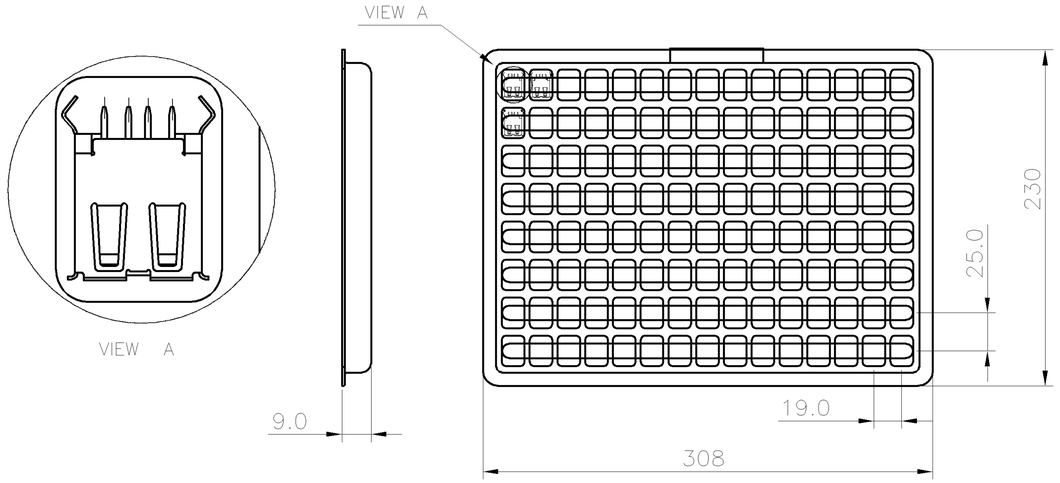

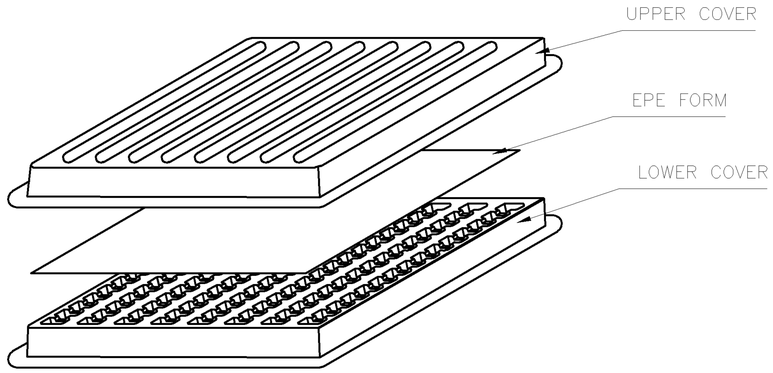

NOTE:
1. PACKAGING MATERIAL IN PLASTIC, RUBBER, INK, PIGMENT AND PAINT MUST MEET CONTROLLED SUBSTANCES PER TE SPEC TEC-138-702.

   * CADMIUM AND CADMIUM COMPOUNDS NOT TO EXCEED: 5 PPM.
   * LEAD, CADMIUM, CHROM VI AND MERCURY NOT TO EXCEED: 100 PPM (COMBINED).

2. MATERIAL:

   TRAY: PVC, UPPER COVER THICKNE=0.3MM. LOWER COVER THICKNE=0.4MM

QTY	PART NUMBER
4800	1734366-2
4800	1734366-1

THIS DRAWING IS A CONTROLLED DOCUMENT.

DIMENSIONS: MM

TOLERANCES UNLESS OTHERWISE SPECIFIED:
0 PLC ± –
1 PLC ± –
2 PLC ± –
3 PLC ± –
4 PLC ± –
ANGLES ± –

MATERIAL –
FINISH –

DWN
CHK
APVD
PRODUCT SPEC —
APPLICATION SPEC —
WEIGHT —

TE Connectivity

NAME
RECEPT ASSY, VERTICAL, 4POSITION THRU-HOLE, TYPE A USB

SIZE	CAGE CODE	DRAWING NO	RESTRICTED TO
A3	00779	C-1734366	

CUSTOMER DRAWING | SCALE — | SHEET 2 OF 3 | REV C

THIS DRAWING IS UNPUBLISHED. RELEASED FOR PUBLICATION –,– .
© COPYRIGHT – BY TYCO ELECTRONICS CORPORATION. ALL RIGHTS RESERVED.

LOC	DIST
DW	—

REVISIONS

P	LTR	DESCRIPTION	DATE	DWN	APVD
		SEE SHEET 1.			

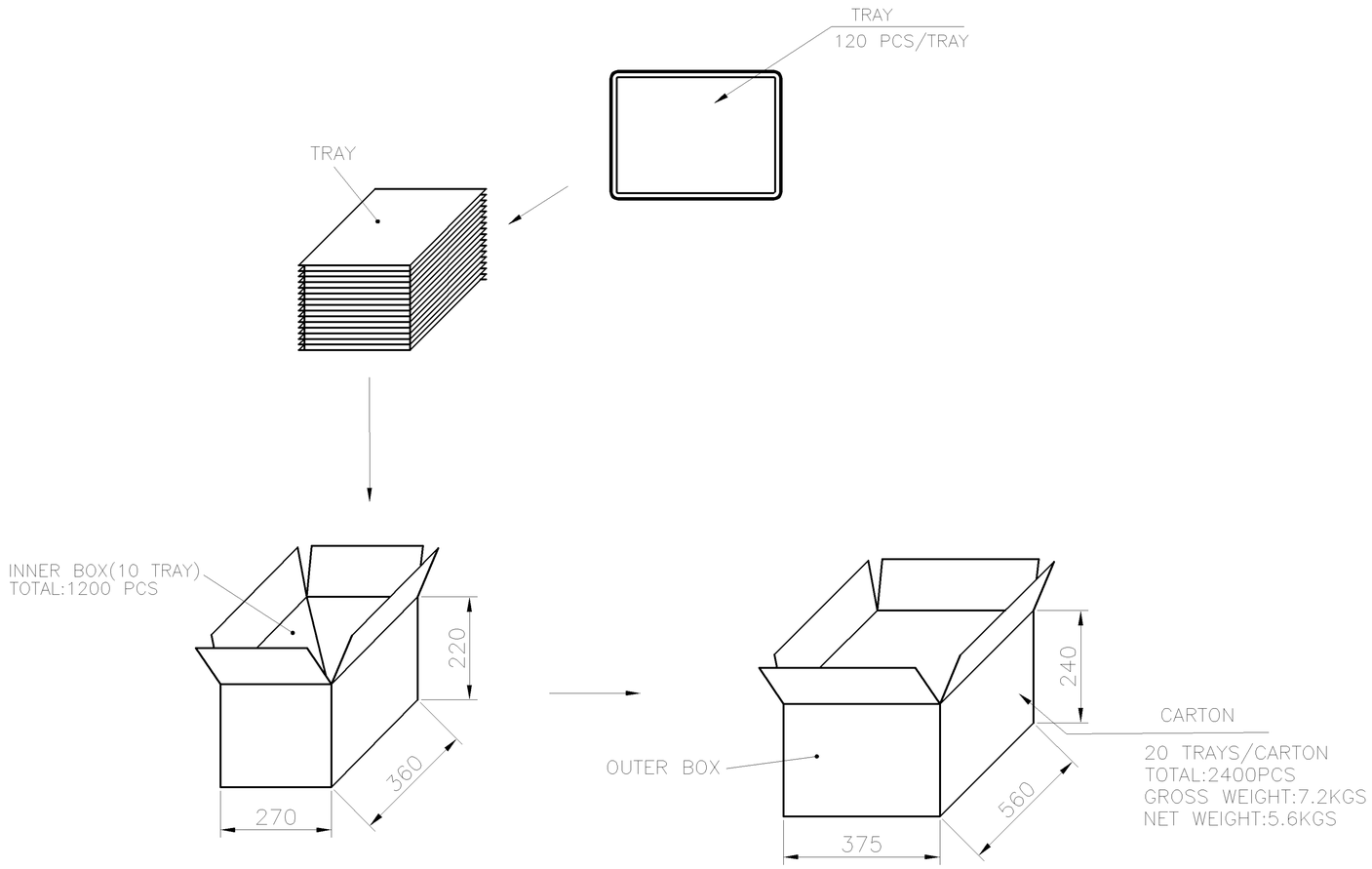

USE THE TAPE TO FIX THE TRAY(4X)

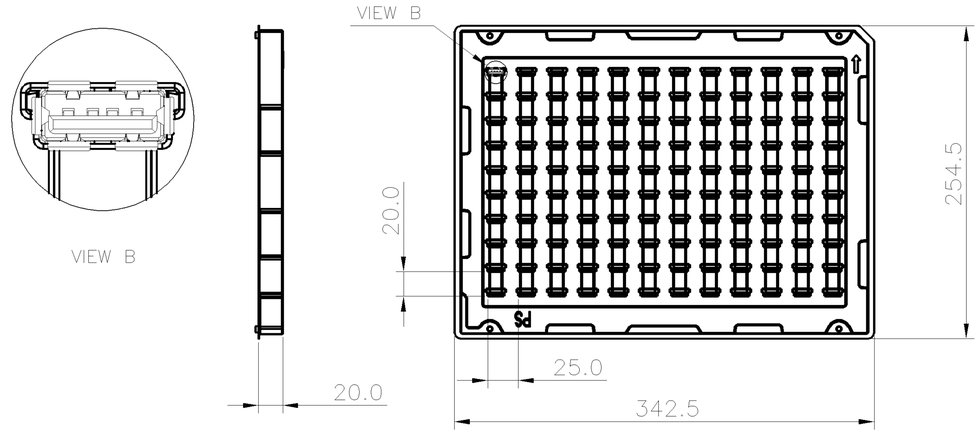

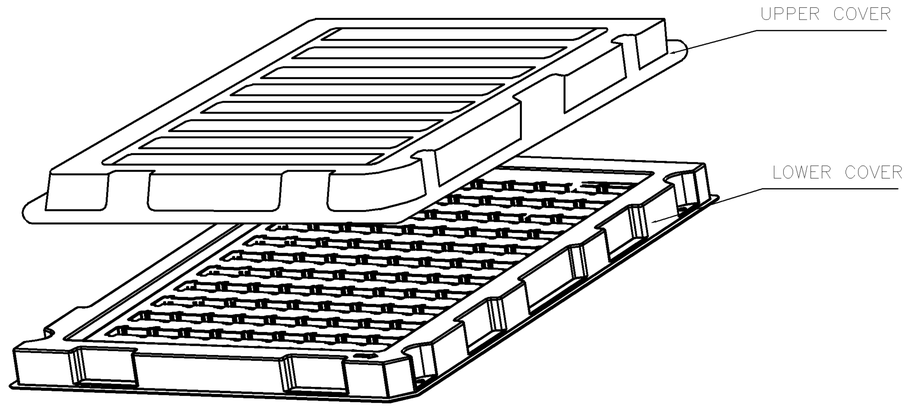

NOTE:

1. PACKAGING MATERIAL IN PLASTIC, RUBBER, INK, PIGMENT AND PAINT MUST MEET CONTROLLED SUBSTANCES PER TE SPEC TEC–138–702.

   * CADMIUM AND CADMIUM COMPOUNDS NOT TO EXCEED: 5 PPM.
   * LEAD, CADMIUM, CHROM VI AND MERCURY NOT TO EXCEED: 100 PPM (COMBINED).

2. MATERIAL:

   TRAY: PS, UPPER COVER THICKNE=0.5MM. LOWER COVER THICKNE=0.7MM

QTY	PART NUMBER
2400	1734366–4
2400	1734366–3

THIS DRAWING IS A CONTROLLED DOCUMENT.

DIMENSIONS: MM

TOLERANCES UNLESS OTHERWISE SPECIFIED:

0 PLC	± –
1 PLC	± –
2 PLC	± –
3 PLC	± –
4 PLC	± –
ANGLES	± –

MATERIAL –

FINISH –

DWN
CHK
APVD
PRODUCT SPEC —
APPLICATION SPEC —
WEIGHT —

TE Connectivity

NAME
RECEPT ASSY, VERTICAL, 4POSITION THRU–HOLE, TYPE A USB

SIZE	CAGE CODE	DRAWING NO	RESTRICTED TO
A3	00779	C–1734366	

CUSTOMER DRAWING | SCALE — | SHEET 3 OF 3 | REV C