used for: D-SUB HD

Part NO.	POS.	A -0.76	B -0.25	C
164A17009X	15	31.19	16.46	25.00 $^{+0.12}_{-0.13}$
164A17019X	26	39.52	24.79	33.30 $^{+0.15}_{-0.1}$
164A17029X	44	53.42	38.50	47.04 ±0.13
164A17039X	62	69.70	54.96	63.50 ±0.13

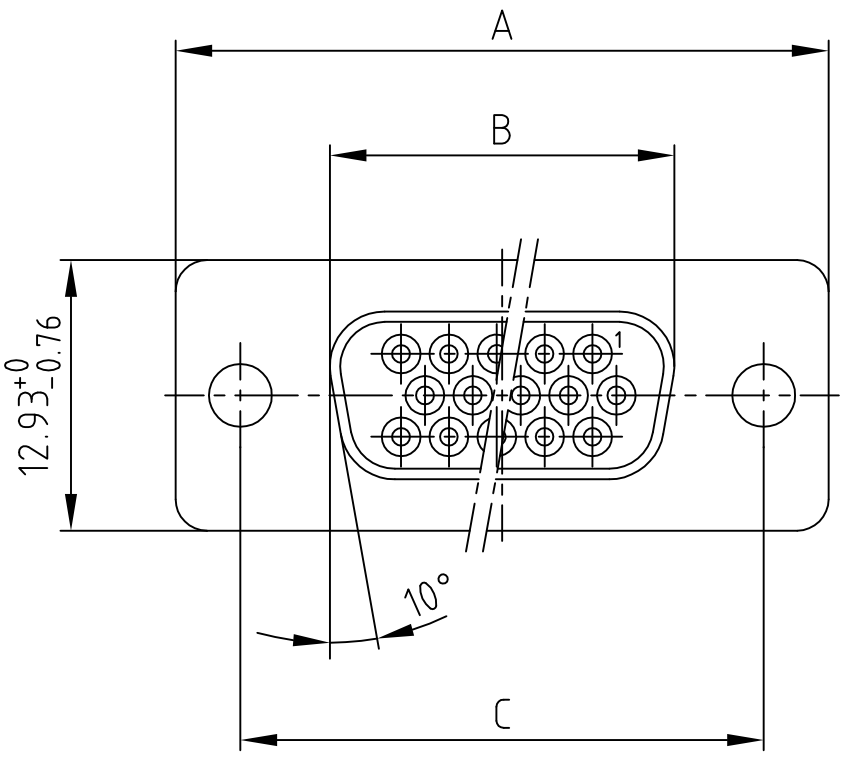

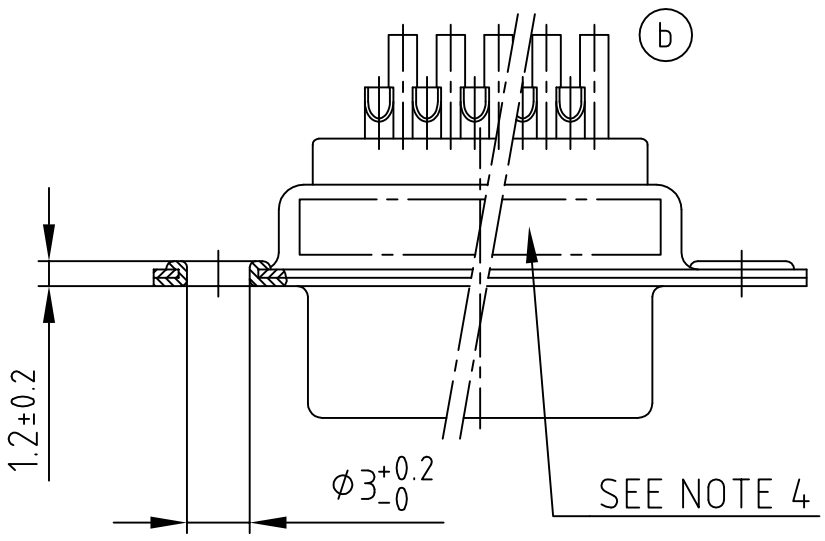

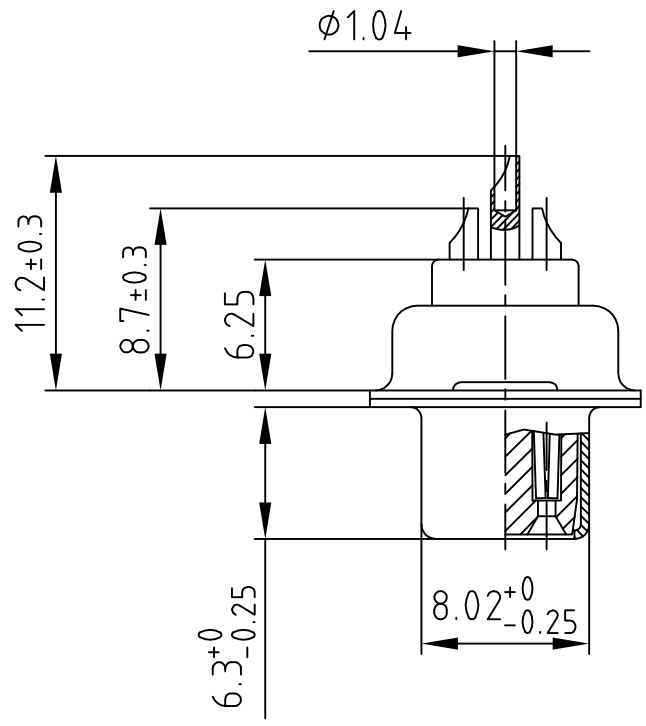

Directive 2002/95/EC RoHS compliant

APPROVAL # FREIGABE # DEBLOCAGE # AUTORIZACION # APPROVAL

CUSTOMER APPROVAL DATE:

NAME: TITLE:

COMPANY NAME:

APPROVAL # FREIGABE # DEBLOCAGE # AUTORIZACION # APPROVAL

(b) NOTES:

1. METALSHELLS: STEEL; min. 315µin TIN over 40-80µin Nickel
2. INSULATORS: PBT GF UL 94 V-0, BLACK
3. CONTACTS: COPPER ALLOY
   PLATING: GOLD FLASH over NICKEL
   SOLDER CUP ACCEPTS CABLE AWG 22
4. CONNECTOR IS PART MARKED: PART-NO. CONEC ABC

THIS DRAWING MAY NOT BE COPIED OR REPRODUCED IN ANY WAY, AND MAY NOT BE PASSED ON TO A THIRD PARTY WITHOUT WRITTEN PERMISSION. OWNERSHIP AND COPYRIGHT OF CONEC GmbH

DO NOT ALTER CAD DRAWING BY HAND

CONEC CORPORATION
BRAMPTON, ONTARIO

tolerance

dim. in mm

scale: 2:1

material: SEE NOTES

2 x b	Ä 3104	04.09.08	Petker
a	Origin		
rev.	description	date	name

2001	date	name
drawn	04.10.	Parei
appd.	04.10.	E. Mickenbecker
norm		
d-old		

title:

D-SUB HD FEMALE
15-62pos. SOLDER CUP

dwg no: 16K1A322A

AutoCAD 2000

DIN-A 4

sh: 1/1

part no: SEE TABLE