AXL F BK PB

Axioline F bus coupler for PROFIBUS DP

Data sheet
8419_en_02

1 Description

The bus coupler represents the link between a PROFIBUS network and the Axioline F system.

You can connect up to 63 Axioline F devices to an existing PROFIBUS system with the help of the bus coupler.

PROFIBUS features

- PROFIBUS connection via 9-pos. D-SUB female connector
- Interface physics RS-485 for PROFIBUS
- Electrical isolation between PROFIBUS interface and logic
- DP/V1 for Class 1 and Class 2 masters
- Data transmission speed of 9.6 kbps up to 12 Mbps (automatic detection)
- Rotary encoding switches for setting the PROFIBUS address
- Dynamic configuration is supported
- Supported PROFIBUS addresses 0 to 126
- Device description using GSD file
- I & M functions

Features of Axioline F

- Up to 63 additional Axioline F devices can be connected
- Typical cycle time of the Axioline F local bus is around 10 µs
- Diagnostic and status indicators

This data sheet is only valid in association with the UM EN AXL F SYS INST user manual.

Make sure you always use the latest documentation.
It can be downloaded from the product at phoenixcontact.net/products.

Here you will also find the current GSD file.

2 Table of contents

3 Ordering data

Description	Type	Order No.	Pcs./Pkt.
Axioline F bus coupler for PROFIBUS DP (including bus base module and connector)	AXL F BK PB	2688530	1

Accessories	Type	Order No.	Pcs./Pkt.
Axioline F bus base module for housing type BK (Replacement item)	AXL BS BK	2701422	5
Axioline F short power connector (for e.g., AXL F BK ...) (Replacement item)	AXL CN S/UL	2701421	5
Zack marker strip for Axioline F (device labeling), in 2 x 20.3 mm pitch, unprinted, 25-section, for individual labeling with B-STIFT 0.8, X-PEN, or CMS-P1-PLOTTER (Marking)	ZB 20,3 AXL UNPRINTED	0829579	25
Zack marker strip, flat, in 10 mm pitch, unprinted, 10-section, for individual labeling with M-PEN 0,8, X-PEN, or CMS-P1-PLOTTER (Marking)	ZBF 10/5,8 AXL UNPRINTED	0829580	50
Insert label, Roll, white, unlabeled, can be labeled with: THERMOMARK ROLL, THERMOMARK ROLL X1, THERMOMARK X, THERMOMARK S1.1, Mounting type: snapped into marker carrier, Lettering field: 35 x 18.7 mm (Marking)	EMT (35X18,7)R	0801831	1
D-SUB plug, 9-pos., pin, assignment: 3, 5, 6, 8; two M12 cable glands (B-coded) under 35°. Bus system: PROFIBUS DP up to 12 Mbps. Termination resistor via separate M12 terminator. (Connector/Adapter)	SUBCON-PLUS-PROFIB/35/M12	2902320	1
D-SUB connector, 9-pos., male connector, cable entry < 35°, bus system: PROFIBUS DP up to 12 Mbps, termination resistor can be switched on via slide switch, pin assignment: 3, 5, 6, 8; screw connection terminal blocks (Connector/Adapter)	SUBCON-PLUS-PROFIB/SC2	2708232	1
D-SUB connector, 9-pos., male connector, cable entry < 90°, bus system: PROFIBUS DP up to 12 Mbps, termination resistor can be switched on via slide switch, pin assignment: 3, 5, 6, 8; IDC terminal block connection (Connector/Adapter)	SUBCON-PLUS-PROFIB/90/IDC	2313672	1
D-SUB connector, 9-pos., male connector, cable entry < 90°, bus system: PROFIBUS DP up to 12 Mbps, termination resistor can be switched on via slide switch, pin assignment: 3, 5, 6, 8; screw connection terminal blocks (Connector/Adapter)	SUBCON-PLUS-PROFIB/90/SC	2313698	1
D-SUB connector, 9-pos., male connector, axial version with two cable entries, bus system: PROFIBUS DP up to 12 Mbps, termination resistor can be switched on via slide switch, pin assignment: 3, 5, 6, 8; screw connection terminal blocks (Connector/Adapter)	SUBCON-PLUS-PROFIB/AX/SC	2744380	1
Connecting cable, for connecting the controller to a PC for PC Worx and LOGIC+, USB A to micro USB B, 2 m in length. (Cable/conductor)	CAB-USB A/MICRO USB B/2,0M	2701626	1

Documentation	Type	Order No.	Pcs./Pkt.
User manual, English, Diagnostic and firmware functions of the AXL F BK PB bus coupler	UM EN AXL F BK PB	-	-
User manual, English, Axioline F: System and installation	UM EN AXL F SYS INST	-	-
User manual, English, Axioline F: Diagnostic registers, and error messages	UM EN AXL F SYS DIAG	-	-

4 Technical data

Dimensions (nominal sizes in mm)

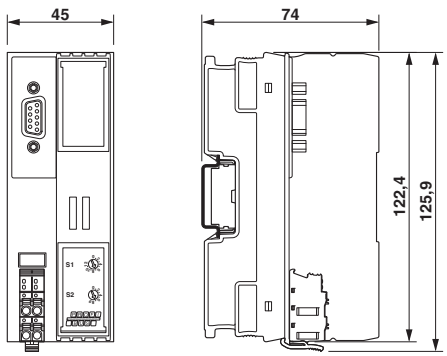

Width	45 mm
Height	125.9 mm
Depth	74 mm
Note on dimensions	The depth is valid when a TH 35-7.5 DIN rail is used (according to EN 60715).

General data

Color	traffic grey A RAL 7042
Weight	175 g (with connector and bus base module)
Ambient temperature (operation)	-25 °C ... 60 °C (Mounting position: wall mounting on horizontal DIN rail) -25 °C ... 55 °C (Mounting position: any)
Ambient temperature (storage/transport)	-40 °C ... 85 °C
Permissible humidity (operation)	5 % ... 95 % (non-condensing)
Permissible humidity (storage/transport)	5 % ... 95 % (non-condensing)
Air pressure (operation)	70 kPa ... 106 kPa (up to 3000 m above sea level)
Air pressure (storage/transport)	70 kPa ... 106 kPa (up to 3000 m above sea level)
Degree of protection	IP20
Protection class	III, IEC 61140, EN 61140, VDE 0140-1
Mounting position	Any (observe temperature derating)

Connection data

Designation	Axioline F connector
Connection method	Push-in connection
Conductor cross section solid / stranded	0.2 mm² ... 1.5 mm² / 0.2 mm² ... 1.5 mm²
Conductor cross section [AWG]	24 ... 16
Stripping length	8 mm

Please observe the information provided on conductor cross sections in the “Axioline F: system and installation” user manual.

Interface PROFIBUS DP

Number	1
Connection method	9-pos. D-SUB (socket)
Number of positions	9
Transmission speed	9,6 kBit/s ... 12 MBit/s

Interface Axioline F local bus

Connection method	Bus base module
Transmission speed	100 MBit/s

Interface Service

Number	1
Connection method	Micro USB type B

System limits of the bus coupler

Amount of process data	max. 488 Byte (per station) max. 244 Byte (Input) max. 244 Byte (Output)
Number of parameter data	max. 244 Byte
Number of configuration data	max. 244 Byte
IN and OUT process data for I/O modules that can be aligned	488 Byte
IN process data for I/O modules that can be aligned	244 Byte
OUT process data for I/O modules that can be aligned	244 Byte
Number of supported devices	max. 63 (per station)

NOTE: Electronics may be damaged when overloaded

Observe the logic current consumption of each device when configuring an Axioline F station. It is specified in every module-specific data sheet. The current consumption can differ depending on the individual module. The permissible number of devices that can be connected therefore depends on the specific station structure.

Supply of the bus coupler

Supply of communications power U_L	24 V DC
Maximum permissible voltage range	19.2 V DC ... 30 V DC (including all tolerances, including ripple)
Current supply at U_{Bus}	2 A
Current consumption from U_L	typ. 101 mA (without I/Os and U_L = 24 V) max. 567 mA (with 2 A at U_{Bus} for the I/Os and U_L = 24 V)
Power consumption at U_L	typ. 2.5 W (without I/Os) max. 13.7 W (with 2 A load at U_{Bus} for the I/Os)

NOTE: Electronics may be damaged when overloaded

Provide external fuses for the 24 V U_L area. The power supply unit must be able to supply four times the nominal current of the external fuse to ensure that it blows in the event of an error.

Error messages to the higher level control or computer system

Diagnostic alarms

Mechanical tests

Vibration resistance in acc. with EN 60068-2-6/IEC 60068-2-6	5g
Shock in acc. with EN 60068-2-27/IEC 60068-2-27	30g, 11 ms period, half-sine shock pulse
Continuous shock according to EN 60068-2-27/IEC 60068-2-27	10g

Conformance with EMC Directive 2004/108/EC

Noise immunity test in accordance with EN 61000-6-2	
Electrostatic discharge (ESD) EN 61000-4-2/IEC 61000-4-2	Criterion B; 6 kV contact discharge, 8 kV air discharge
Electromagnetic fields EN 61000-4-3/IEC 61000-4-3	Criterion A; Field intensity: 10 V/m
Fast transients (burst) EN 61000-4-4/IEC 61000-4-4	Criterion B, 2 kV
Transient surge voltage (surge) EN 61000-4-5/IEC 61000-4-5	Criterion B; DC supply lines: ±0.5 kV/±0.5 kV (symmetrical/asymmetrical); field-bus cable shield: ±1 kV
Conducted interference EN 61000-4-6/IEC 61000-4-6	Criterion A; Test voltage 10 V
Noise emission test according to EN 61000-6-3	
Radio interference properties EN 55022	Class B

Approvals

For the latest approvals, please visit phoenixcontact.net/products.

5 Internal circuit diagram

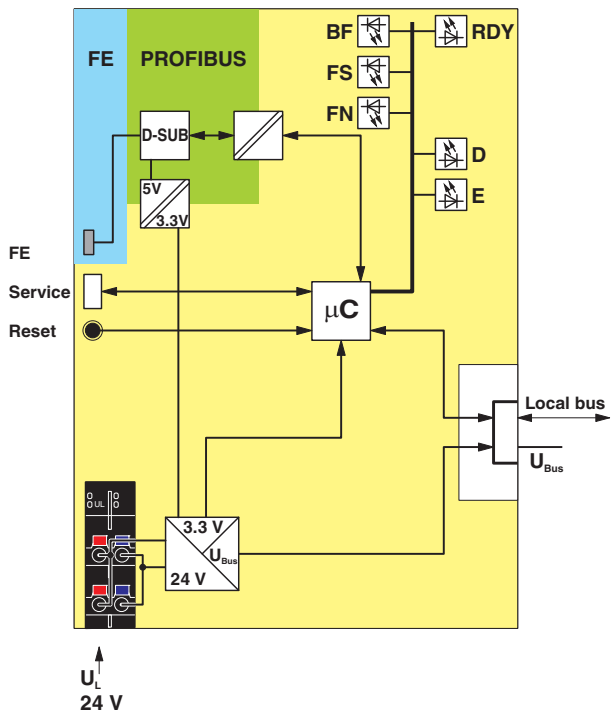

Key:

FE	Functional earth ground
Service	Service interface
Reset	Reset button
Local bus	Axioline F local bus (hereinafter referred to as local bus)
D-SUB	D-SUB connection
	Power supply unit with electrical isolation
	Microcontroller
	Power supply unit
	LED
	Electrically isolated areas

Figure 1 Internal wiring of the terminal points

6 Connection of PROFIBUS and power supply

6.1 Connecting PROFIBUS

Connect PROFIBUS to the bus coupler using a 9-pos. D-SUB connector (see Ordering data). For the pin assignment, please refer to the figure and the table.

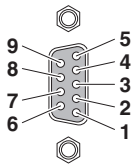

Figure 2 D-SUB connector pin assignment

Pin	Assignment
1	Reserved
2	Reserved
3	RxD/TxD-P (receive/transmit data +), cable B
4	CNTR-P (control signal for repeater), direction control
5	DGND (reference potential to 5 V)
6	VP (+5 V supply voltage for termination resistors)
7	Reserved
8	RxD/TxD-N (receive/transmit data –), cable A
9	Reserved

6.2 Mains termination resistors

Since PROFIBUS DP is a serial bus system in a line or tree structure, the individual branches must be terminated using a termination resistor. The bus coupler does not have a resistor of this type. For further information, please refer to your PROFIBUS documentation. Phoenix Contact recommends the use of the SUBCON-PLUS-PROFIB connector, Order No. 2744348. This connector has a termination resistor that can be connected.

6.3 Connecting the supply voltage - terminal point assignment

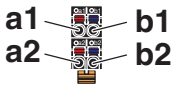

Figure 3 Terminal point assignment

Terminal point	Color	Assignment	
Supply voltage input			
a1, a2	Red	24 V DC (U_L)	Supply of the logic voltage (internally jumpered)
b1, b2	Blue	GND	Reference potential of the supply voltage (internally jumpered)

7 Connection example

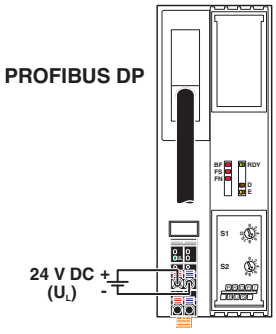

Figure 4 Connection of the cables

8 Configuration via rotary encoding switch

The address is set using two rotary encoding switches. Switch S1 is used to set the position in tens (x10) and S2 is used to set the position in units (x1). Addresses can be set between 0 and 126. The figure shows the address setting 74.

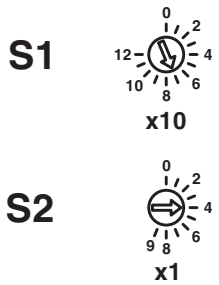

Figure 5 (ADDRESS) rotary encoding switches

9 Parameter data

During configuration, please note that connected digital input/output modules also use parameter data from PROFIBUS. Please refer to the GSD file for the parameter data length.

10 Local status and diagnostic indicators

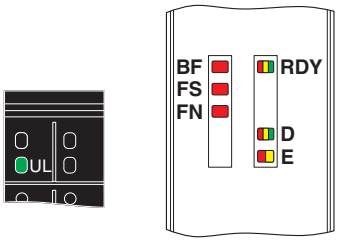

Figure 6 Local status and diagnostic indicators

Designation	Color	Meaning	State	Description
UL	Green	**U**$_{Logic}$	ON	Communications power supply present.
			OFF	Communications power supply not present.
BF	Red	**B**us **F**ault	ON	No communication on PROFIBUS
			OFF	No error
FS	Red	**F**ailure **S**elect	ON	If FS is on, FN indicates the error type
			OFF	If FS is not on, FN indicates the error number
FN	Red	**F**ailure **N**umber	Flashing	The number of flashing pulses indicates the error type or the error number, depending on whether FS is on or not
			OFF	No error
RDY	Green/ yellow/ red	**Ready**	Green ON	Device is ready for operation.
			Flashing green/ yellow	Communications power undervoltage or surge voltage
				Overtemperature
			Yellow ON	Firmware/bus coupler is booting
			Yellow flashing	Firmware update is being performed.
			Flashing yellow/ red	Firmware update has failed.
			Red ON	Rotary encoding switches are set to an invalid/reserved position.
			Red flashing	Firmware update error; wrong or faulty firmware loaded; restart the device.
			OFF	Device is not ready for operation.

Designation	Color	Meaning	State	Description
D	Green/ yellow/ red	**D**iagnostics	Green ON	The station is ready for operation, communication within the station is OK. All data is valid. There are no faults.
			Green flashing	The station is ready for operation, communication within the station is OK. The data is **not** valid. Valid data from the controller/higher-level network not available. There is no fault in the module.
			Yellow ON	The station is ready for operation, no data exchange taking place.
			Yellow flashing	Access from Startup+ in I/O check mode
			Flashing yellow/ red	Local bus error during active I/O check
			Red flashing	Local bus error on startup
			Red ON	General local bus error
				Communication error
				Local bus device has been removed or configured device is missing.
				Reset at a local bus device
				Serious device error at a local bus device (local bus device can no longer be reached)
E	Yellow/ red	**E**rror	Yellow ON	I/O warning at a local bus device
			Red ON	I/O error at a local bus device
			OFF	No I/O messages present.

11 Reset button

The reset button is located beneath the top marking label on the bus coupler.

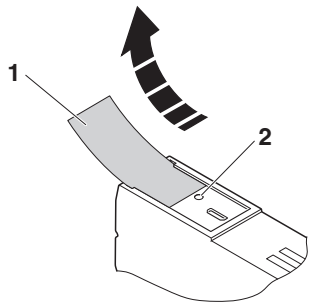

Figure 7 Reset button

1 Labeling field

2 Reset button

The reset button has the following function:

– Restarting the bus coupler

The bus coupler is restarted when the button is pressed during operation.

The outputs of the station are set to the parameterized substitute values.

The process image of the inputs is not re-read.

12 Service interface

The service interface is located beneath the top marking field on the bus coupler.

The service interface is used for later applications.

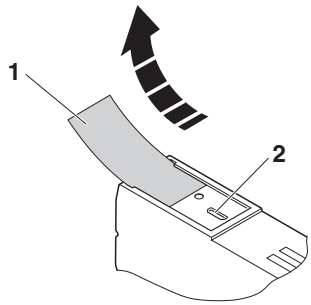

Figure 8 Service interface

1 Labeling field

2 Service interface

13 Substitute value behavior

If PROFIBUS communication fails or an error occurs in the local bus, all outputs of the station are set to the substitute values previously parameterized on the module.

For the possible substitute values of a module, please refer to the relevant module-specific data sheet.

14 Firmware functions

Function	AXL F BK PB	AXL BK PB	IL PB BK DI8 DO4/EF-PAC
	FW 2.0 or later	FW 1.0 or later	
Process and parameter data			
Total amount of process data			
- IN and OUT	488 bytes, maximum	488 bytes, maximum	488 bytes, maximum
- IN	244 bytes, maximum	244 bytes, maximum	244 bytes, maximum
- OUT	244 bytes, maximum	244 bytes, maximum	244 bytes, maximum
Amount of process data for alignable I/O terminals			
- IN and OUT	488 bytes, maximum	488 bytes, maximum	486 bytes, maximum
- IN	244 bytes, maximum	244 bytes, maximum	243 bytes, maximum

Function	AXL F BK PB	AXL BK PB	IL PB BK DI8 DO4/EF-PAC
	FW 2.0 or later	FW 1.0 or later	
- OUT	244 bytes, maximum	244 bytes, maximum	243 bytes, maximum
Amount of parameter data			
- Total	244 bytes, maximum	244 bytes, maximum	244 bytes, maximum
- For alignable I/O terminals	233 bytes, maximum	233 bytes, maximum	230 bytes, maximum
Amount of configuration data			
- Total	244 bytes, maximum	244 bytes, maximum	244 bytes, maximum
- For alignable I/O terminals	244 bytes, maximum	244 bytes, maximum	239 bytes, maximum
Other			
Number of PCP devices	–	–	max. 16
Supports DP/V1 read and write (acyclic communication), Class 1 and Class 2 master	Yes	Yes	Yes
Communication with PCP modules via "normal" process data (DP/V0)	–	–	Yes
Transmission invoke ID	–	–	Yes
Parameterization of several I/Os via dialog boxes in the configuration tool	Yes	Yes	Yes
Dynamic configuration (reserving I/Os in the PLC)	Yes	No	Yes
Specification of fail-safe values via the configuration tool	Yes	Yes (hold last value or zero)	Yes
Byte rotation for the IB IL 24 DI 16-PAC and IB IL 24 DO 16-PAC	–	–	Yes
Byte rotation for the IB IL 24 DI 32-PAC and IB IL 24 DO 32-PAC	–	–	Yes
Operation in the event of module failure in the local bus	Yes	Yes	Yes
Acknowledgment of local bus stops via the application program	Yes	No	Yes
Acknowledging bus stops either automatically or via the application program	automatic	automatic	Yes
Diagnostics in bus coupler format	Yes	Yes	Yes
Channel-specific diagnostics	Yes	Yes	Yes
Diagnostics in identification format	Yes	Yes	Yes
Diagnostics as status PDU	Yes	Yes	Yes
Stop behavior can be set via parameter telegram	Yes	No	Yes
I & M functions	Yes	Yes	Yes
PROFIsafe support	No	No	Yes
IO-Link call	No	No	Yes (FW 2.0 or later)
Selection of the diagnostic format in the configuration tool	No	No	Yes

For more detailed information on the bus coupler functions described, please refer to the corresponding documentation.