THIS DRAWING IS UNPUBLISHED. RELEASED FOR PUBLICATION 20
© COPYRIGHT 20 BY TYCO ELECTRONICS CORPORATION. ALL RIGHTS RESERVED.

SET UP GAUGE 2119599-2 | LOC A | DIST 66

REVISIONS

P	LTR	DESCRIPTION	DATE	DWN	APVD
	1	ORIGINAL	29SEPT2014	GH	TE
	A	RELEASED	04FEB2015	GH	TE
	B	ECR-15-002539	16FEB2015	KH	JT
	B1	ECR-16-007330	23MAY2016	YY	JT

ATLANTIC VERSION TERMINATOR INTERFACE ADAPTER

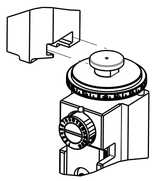

PART NUMBER	REVISION	DESCRIPTION	FEED TYPE
2150494-1	B	FINE CRIMP HEIGHT ADJUST	MECHANICAL
2150494-2	B	FINE CRIMP HEIGHT ADJUST	PNEUMATIC
2150494-5	B	FINE CRIMP HEIGHT ADJUST	SERVO LATCH PLATE 4
2150494-6	B	NON-CRIMP HEIGHT ADJUST	SERVO 4 LATCH PLATE 12
2150494-7	B	FINE CRIMP HEIGHT ADJUST	NONE
7-2150494-7	A	CRIMP TOOLING KIT	-

APPLICATOR STYLE CONVERSION CHART

CONVERT TO	PART NUMBERS REQUIRED					
PNEUMATIC FEED	2119950-1	2119792-2	-	2119641-1	-	2063440-1
SERVO LATCH PLATE	2119951-1	1901697-1	8-2150494-5	-	-	2168400-7 (QUANTITY 2)
SMART APPLICATOR	2161326-1	-	8-2150494-4	-	-	-
MECHANICAL FEED	2119949-1	2063961-1	5-18022-5	2119653-1	-	-
SERVO LATCH PLATE	2119951-1	1901697-1	8-2150494-5	-	-	2168400-7 (QUANTITY 2)
SMART APPLICATOR	2161326-1	-	8-2150494-4	-	-	-
MECHANICAL FEED	2119949-1	2063961-1	5-18022-5	2119653-1	-	-
PNEUMATIC FEED	2119950-1	2119792-2	-	2119641-1	-	2063440-1
-	-	-	-	-	-	-
-	-	-	-	-	-	-
-	-	-	-	-	-	-
7-2150494-7	A	CRIMP TOOLING KIT	-	-	-	-

APPLICATOR DATA

CRIMP	SIZE	TYPE
WIRE	1.53 mm [.060]	O
INSUL		-

APPL INSTRUCTIONS 408-10390

TERMINAL DATA: TE TERMINAL — TE CRIMP SPECIFICATION

TERMINAL NAME: CIRCULAR WIRE PIN TERMINAL

WIRE STRIP LENGTH	INSULATION DIAMETER RANGE
5.95-6.33 mm [.234-.249 IN]	Ø

TERMINAL APPLICATION SPECIFICATION	NONE	-	-
	-	-	-

TERMINALS APPLIED

TE TERMINAL	TE TERMINAL	TE TERMINAL	TE TERMINAL
737190-2	926933-2	926933-6	926933-8
926933-1	926933-3	926933-7	926933-9

WIRE SIZE	CRIMP HEIGHT mm [INCH]	CRIMP HEIGHT REFERENCE SETTING 9
1.00mm2	1.65+/-0.05 [.065+/-.002]	5.8
0.75mm2	1.55+/-0.05 [.061+/-.002]	6.3

1. RECOMMENDED SPARE PARTS

2. GREASE BEARING SURFACES LIGHTLY

3. LUBRICATE DAILY PER THE APPLICATOR INSTRUCTION SHEET SUPPLIED WITH THE APPLICATOR.

4. APPLICATOR SPECIFIC DATA TO BE ENTERED INTO BLANK MEMORY CHIP AT ASSEMBLY. SEE BELOW FOR PART NUMBER:
   MECHANICAL FEED WITH "SMART APPLICATOR" CONVERSION: 8-2150494-4
   PNEUMATIC FEED WITH "SMART APPLICATOR" CONVERSION: 8-2150494-4
   SERVO FEED WITH "FINE CRIMP HEIGHT ADJUST": 8-2150494-5
   SERVO FEED WITH "NON-CRIMP HEIGHT ADJUST": 8-2150494-6

5. ADJUSTMENT OF THE STRIPPER MAY BE REQUIRED WHEN MOVING THE APPLICATOR BETWEEN BENCH AND LEADMAKER APPLICATIONS.

6. APPLY PART NUMBER 1-23419-5 LOCTITE TO THREADS OF ITEMS 62. FOR -6 ONLY APPLY PART NUMBER 1-23419-5 LOCTITE TO THREADS OF ITEMS 37.

7. GREASE THREADS, GROOVE AND O-RING ON ITEMS 35 & 252.

8. MAGNET, ITEM 166 MUST BE ORIENTED CORRECTLY IN ORDER TO PROPERLY ACTUATE THE COUNTER.

9. CRIMP HEIGHT REFERENCE SETTING WAS THE SETTING USED WHEN THE APPLICATOR WAS QUALIFIED AT THE FACTORY. ADJUSTMENT MAY BE NECESSARY WHEN RUNNING APPLICATOR IN THE FIELD.

10. SPARE FEED CAM STORAGE LOCATION REFER TO INSTRUCTION SHEET FOR ADDITIONAL INFORMATION.

11. THE RECOMMENDED SET-UP FOR END FEED APPLICATORS IS POST-FEED WITH ITEM 2119653-1. THE APPLICATOR CAN BE CONFIGURED FOR PRE-FEED WITH ITEM 2119652-1 BUT MAY ENCOUNTER PROBLEMS WITH SOME APPLICATIONS. FEED ISSUES OR TERMINAL JAMMING MAY OCCUR IN THE PRE-FEED CONFIGURATION.

12. WHEN ASSEMBLING -6 NON-CRIMP HEIGHT ADJUST APPLICATOR USE SHIM PACK 2119957-2 TO ALIGN APPLICATOR'S MAXIMUM WIRE CRIMP HEIGHT AT NORMAL TERMINATOR SHUT HEIGHT

13. POSITION ITEM 27 IN FRONT OF ITEM 1.

*WARNING
ON INSTALLATION, SET WIRE DISC, ITEM 40 TO LARGEST WIRE SIZE SETTING. USE OF SETTINGS BELOW MINIMUM REQUIRED CRIMP HEIGHT SETTING WILL CAUSE DAMAGE TO CRIMP TOOLING.

ATLANTIC VERSION
Shown on sheets 1 of 4 & 2 of 4
(Pacific version shown on sheets 3 of 4 & 4 of 4)

-77	-7	-6	-5	-2	-1	PART NO	DESCRIPTION	ITEM NO
-	-	1	-	-	-	2119957-2	APPLICATOR SHIM PACK	260
-	1	-	1	1	1	8-21084-0	O-RING, .676 ID, .070 DIA. MAT.	252
-	-	-	-	1	-	2119640-1	PUSH ROD, AIR FEED	250
-	-	-	-	1	-	2079988-1	BUSHING, LCH5-12, MISUMI	249
-	-	-	-	1	-	2119641-1	FEED CAM, AIR FEED	248
-	1	-	1	1	1	2119798-1	DETENT PIN	247
-	1	-	1	1	1	1-22279-3	SPRING, COMPRESSION	246
-	-	1	-	-	-	2119759-1	RAM, AMP STYLE, END FEED, NON-ADJUST	245
-	-	2	2	-	-	2168400-7	SHCS, LOW HEAD, RoHS, M5 X 10	240
-	-	-	-	-	1	2119580-1	MECHANICAL FEED ASSEMBLY	239
-	-	-	-	1	-	2063440-1	AIR FEED MODULE	238
-	-	1	1	-	-	2119740-2	TAG,IDENTIFICATION	213
-	1	1	1	1	1	1803071-1	SPACER,REAR SHEAR STRIP GUIDE	196
1 -	1	1	1	1	1	459722-7	BLADE, SHEAR	195
-	2	2	2	2	2	2168083-1	SCR, SKT HD CAP, RoHS, M3 X 8.0	191
-	-	REF	REF	-	-	1901697-1	FEED FINGER ASSEMBLY,EF	183
-	-	-	-	2	-	21045-3	RING, RETAIN, EXTERN, 3/16 CRESCENT	172
-	1	1	1	1	1	994969-1	MAGNET, RARE EARTH HIGH ENERGY	166
-	REF	REF	REF	REF	REF	994970-2	COUNTER, MAGNETIC	164
-	-	-	-	1	-	240638-1	SPRING, FEED FINGER	163
-	-	-	-	1	-	3-23627-7	PIN, RETAIN, GRVD, 3/16 X .854	137
-	-	REF	REF	-	-	SEE NOTE 4	MEMORY CHIP, PROGRAMMED	135
-	-	1	1	-	-	1633743-1	SERVO FEED LATCH ASM	133
-	1	1	1	1	1	455888-5	SPACER, CRIMPER	82
-	1	1	1	1	1	2119956-2	DOCUMENTATION PACKAGE	71
-	2	2	2	2	2	3-18032-3	SCR, SET, FLT POINT M3 X 20.0	70
-	1	-	-	1	1	2119740-1	TAG,IDENTIFICATION	67
-	2	2	2	2	2	2168078-1	SCREW, DRIVE, RH, RoHS, 2 x .188	66
-	2	2	2	2	2	2168400-8	SHCS, LOW HEAD, RoHS, M4 X 16	64
-	1	-	1	1	1	2119793-1	LIMITER, ADJUSTMENT BOLT	63
6 -	3	-	3	3	3	992763-5	SCR, SET, SOC, CONE POINT, M3 x 4.0	62
-	-	-	-	-	1	5-18022-5	SCR, HEX HD CAP, M4 X 6.0	59
-	-	-	-	-	1	2063961-1	FEED FINGER	58
-	3	3	3	3	3	2168400-4	SHCS, LOW HEAD, RoHS, M4 X 8	57
-	2	2	2	2	2	5018030-1	NUT, HEX, REG, RoHS, M3	54
-	2	2	2	2	2	986965-8	NUT, LOCK, HEX, TORQUE (M4)	53
-	-	-	-	1	-	2119792-2	PAWL, EF, AIR	51
-	-	-	-	1	2	18023-9	SCR, SKT HD CAP M4 X 6.0	49
-	-	-	-	-	1	2119652-1	FEED CAM, PRE FEED	48
-	-	-	-	-	1	2119653-1	FEED CAM, POST FEED	47
-	1	1	1	1	1	1-2119655-7	APPLICATOR BASIC ASSEMBLY, EF	46
-	1	-	1	1	1	2161310-1	RAM, STEPPED, AMP STYLE, END FEED	44
-	1	1	1	1	1	2079383-7	SCR, BHSC, RoHS (M8 X 25)	41
-	1	-	1	1	1	2119645-1	DISC, NUMBERED FA WIRE ADJUSTMENT	40
-	1	-	1	1	1	2119957-1	APPLICATOR SHIM PACK	39
-	1	1	1	1	1	2119644-1	RAM WASHER, PRECISION	38
6 -	1	1	1	1	1	2119085-1	FA HEAD, ATLANTIC STYLE	37
-	1	-	1	1	1	2119092-1	BOLT, ADJUSTMENT	35
-	7	7	7	7	7	1-18028-2	WASHER, FLAT, REG M4	33
-	2	2	2	2	2	1-2168083-2	SCR, SKT HD CAP, RoHS, M4 X 25	31
-	2	2	2	2	2	1-2168083-0	SCR, SKT HD CAP, RoHS, M4 X 10	29
-	1	1	1	1	1	690455-2	STRIPPER, FRONT CASTING	27
-	2	2	2	2	2	1-2168083-6	SCR, SKT HD CAP, RoHS, M4 X 35	25
-	1	1	1	1	1	1752371-1	PLATE, STRIP GUIDE	24
-	1	1	1	1	1	240825-9	PLATE, STRIP HOLD DOWN	23
-	2	2	2	2	2	22281-8	SPRING, COMPRESSION	22
-	1	1	1	1	1	1633168-1	ARM, STOCK DRAG	21
-	1	1	1	1	1	1-464452-6	DRAG, STOCK	20
-	2	2	2	2	2	1-1901259-3	GUIDE, LOWER STRIP	18
1 -	1	1	1	1	1	240644-1	PLATE, REAR SHEAR	11
-	2	2	2	2	2	6-240645-5	SPACER, SHEAR PLATE	10
1 1	1	1	1	1	1	1633342-7	ANVIL, WIRE	8
-	-	-	-	-	-	-	-	5
-	-	-	-	-	-	-	-	4
-	-	-	-	-	-	-	-	3
-	-	-	-	-	-	-	-	2
1 1	1	1	1	1	1	7-459492-8	CRIMPER, WIRE O	1

THIS DRAWING IS A CONTROLLED DOCUMENT FOR TYCO ELECTRONICS CORPORATION. IT IS SUBJECT TO CHANGE AND TO CONTROL BY ENGINEERING ORGANIZATION. SHOULD BE CONTACTED FOR THE LATEST REVISION.

DWN	HOFFNER	26SEPT2014
CHK	T.ELBIN	29SEPT2014
APVD	T.ELBIN	29SEPT2014

TE Connectivity
Harrisburg, PA 17105-3608

DIMENSIONS: mm

TOLERANCES UNLESS OTHERWISE SPECIFIED:
0 PLC ±-
1 PLC ±0.5
2 PLC ±0.13
3 PLC ±0.013
4 PLC ±0.0001
ANGLES ±-

MATERIAL - -
FINISH - -

PRODUCT SPEC -
APPLICATION SPEC -
WEIGHT -

NAME: Ocean End Feed Applicator -

SIZE	CAGE CODE	DRAWING NO	RESTRICTED TO
A1	00779	C-2150494	-

Customer Accessible Production Drawing | SCALE 1:1 | SHEET 1 OF 4 | REV B1

AMP 4805 REV 31MAR2000

SHEETS 3 & 4 ARE NOT REQUIRED FOR ATLANTIC VERSION

THIS DRAWING IS UNPUBLISHED. RELEASED FOR PUBLICATION 20
© COPYRIGHT 20 BY TYCO ELECTRONICS CORPORATION. ALL RIGHTS RESERVED.

LOC	DIST
A	66

REVISIONS

P	LTR	DESCRIPTION	DATE	DWN	APVD
	-	SEE SHEET 1	-	-	-

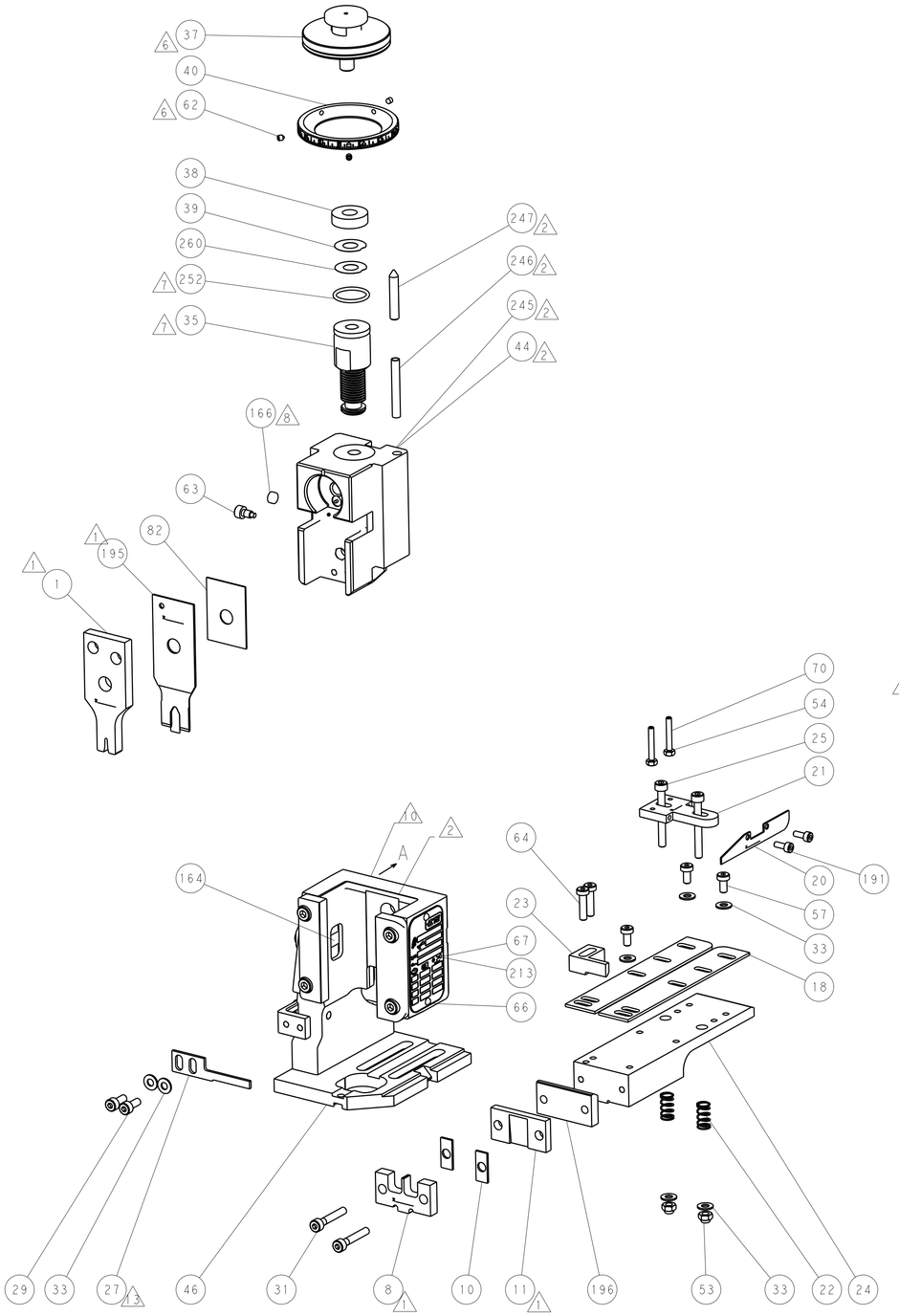

FEED TYPE MECHANICAL

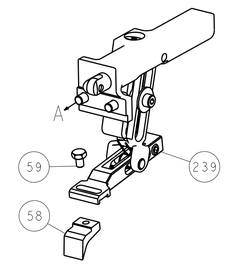

PNEUMATIC

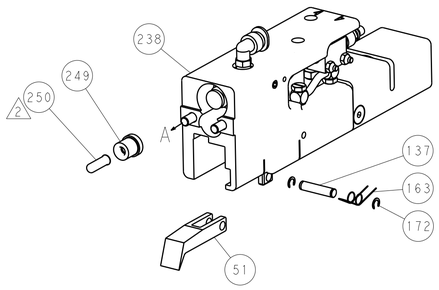

SERVO LATCH PLATE

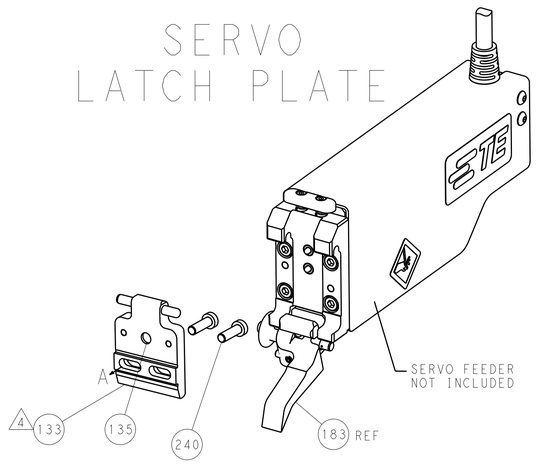

CAM POSITIONS

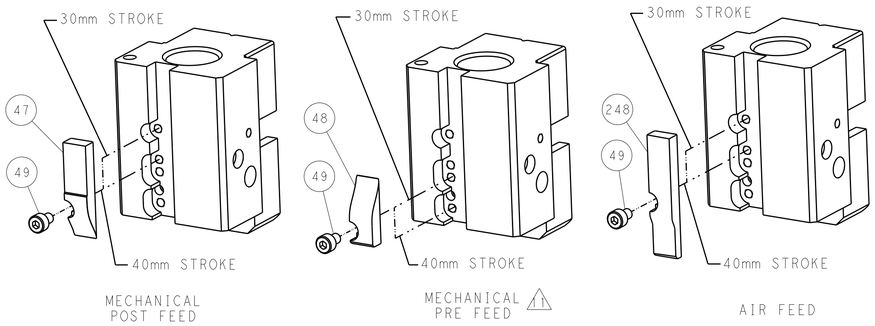

ATLANTIC VERSION

Shown on sheets 1 of 4 & 2 of 4
(Pacific version shown on sheets 3 of 4 & 4 of 4)

THIS DRAWING IS A CONTROLLED DOCUMENT FOR TYCO ELECTRONICS CORPORATION. IT IS SUBJECT TO CHANGE AND THE CONTROLLING ENGINEERING ORGANIZATION SHOULD BE CONTACTED FOR THE LATEST REVISION.

DWN	HOFFNER	26SEPT2014
CHK	T. ELBIN	29SEPT2014
APVD	T. ELBIN	29SEPT2014

DIMENSIONS: mm

TOLERANCES UNLESS OTHERWISE SPECIFIED:
0 PLC ±-
1 PLC ±0.5
2 PLC ±0.13
3 PLC ±0.013
4 PLC ±0.0001
ANGLES ±

MATERIAL - -
FINISH - -

PRODUCT SPEC -
APPLICATION SPEC -
WEIGHT -

TE Connectivity
Harrisburg, PA 17105-3608

NAME: Ocean End Feed Applicator -

SIZE	CAGE CODE	DRAWING NO	RESTRICTED TO
A1	00779	C-2150494	-

Customer Accessible Production Drawing | SCALE 1:1 | SHEET 2 OF 4 | REV B1

AMP 4805 REV 31MAR2000

SHEETS 3 & 4 ARE NOT REQUIRED FOR ATLANTIC VERSION

THIS DRAWING IS UNPUBLISHED. RELEASED FOR PUBLICATION 20
© COPYRIGHT 20 BY TYCO ELECTRONICS CORPORATION. ALL RIGHTS RESERVED.

SET UP GAUGE 2119599-2 | LOC A | DIST 66

REVISIONS

P	LTR	DESCRIPTION	DATE	DWN	APVD
	-	SEE SHEET 1	-	-	-

PACIFIC VERSION TERMINATOR INTERFACE ADAPTER	PART NUMBER	REVISION	DESCRIPTION	FEED TYPE
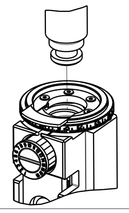	2-2150494-1	B	FINE CRIMP HEIGHT ADJUST	MECHANICAL
	2-2150494-2	B	FINE CRIMP HEIGHT ADJUST	PNEUMATIC
	2-2150494-5	B	FINE CRIMP HEIGHT ADJUST	SERVO LATCH PLATE 4
	2-2150494-7	B	FINE CRIMP HEIGHT ADJUST	NONE
	7-2150494-7	A	CRIMP TOOLING KIT	-

APPLICATOR STYLE CONVERSION CHART

CONVERT TO	PART NUMBERS REQUIRED					
PNEUMATIC FEED	2119950-1	2119792-2	-	2119641-2	-	2063440-1
SERVO LATCH PLATE	2119951-1	1901697-1	8-2150494-5	-	-	2168400-7 (QUANTITY 2)
SMART APPLICATOR	2161326-1	-	8-2150494-4	-	-	-
MECHANICAL FEED	2119949-1	2063961-1	5-18022-5	2119653-2	-	-
SERVO LATCH PLATE	2119951-1	1901697-1	8-2150494-5	-	-	2168400-7 (QUANTITY 2)
SMART APPLICATOR	2161326-1	-	8-2150494-4	-	-	-
MECHANICAL FEED	2119949-1	2063961-1	5-18022-5	2119653-2	-	-
PNEUMATIC FEED	2119950-1	2119792-2	-	2119641-2	-	2063440-1
-	-	-	-	-	-	-
-	-	-	-	-	-	-

APPLICATOR DATA

CRIMP	SIZE	TYPE
WIRE	1.53 mm [.060]	O
INSUL		-

APPL INSTRUCTIONS 408-10390

TERMINAL DATA: TE TERMINAL — TE CRIMP SPECIFICATION

TERMINAL NAME: CIRCULAR WIRE PIN TERMINAL

WIRE STRIP LENGTH 5.95-6.33 mm [.234-.249 IN]	INSULATION DIAMETER RANGE ∅	
TERMINAL APPLICATION SPECIFICATION	NONE	-	-
	-	-	-

TERMINALS APPLIED

TE TERMINAL	TE TERMINAL	TE TERMINAL	TE TERMINAL
737190-2	926933-2	926933-6	926933-8
926933-1	926933-3	926933-7	926933-9

WIRE SIZE	CRIMP HEIGHT mm [INCH]	CRIMP HEIGHT REFERENCE SETTING 9
1.00mm2	1.65+/-0.05 [.065+/-.002]	5.8
0.75mm2	1.55+/-0.05 [.061+/-.002]	6.3

1 RECOMMENDED SPARE PARTS

2 GREASE BEARING SURFACES LIGHTLY

3. LUBRICATE DAILY PER THE APPLICATOR INSTRUCTION SHEET SUPPLIED WITH THE APPLICATOR.

4 APPLICATOR SPECIFIC DATA TO BE ENTERED INTO BLANK MEMORY CHIP AT ASSEMBLY. SEE BELOW FOR PART NUMBER:
MECHANICAL FEED WITH "SMART APPLICATOR" CONVERSION: 8-2150494-4
PNEUMATIC FEED WITH "SMART APPLICATOR" CONVERSION: 8-2150494-4
SERVO FEED WITH "FINE CRIMP HEIGHT ADJUST": 8-2150494-5

5. ADJUSTMENT OF THE STRIPPER MAY BE REQUIRED WHEN MOVING THE APPLICATOR BETWEEN BENCH AND LEADMAKER APPLICATIONS.

6 APPLY PART NUMBER 1-23419-5 LOCTITE TO THREADS OF ITEMS 62.

7 GREASE THREADS, GROOVE AND O-RING ON ITEMS 139 & 153.

8 MAGNET, ITEM 166 MUST BE ORIENTED CORRECTLY IN ORDER TO PROPERLY ACTUATE THE COUNTER.

9 CRIMP HEIGHT REFERENCE SETTING WAS THE SETTING USED WHEN THE APPLICATOR WAS QUALIFIED AT THE FACTORY. ADJUSTMENT MAY BE NECESSARY WHEN RUNNING APPLICATOR IN THE FIELD.

10 SPARE FEED CAM STORAGE LOCATION REFER TO INSTRUCTION SHEET FOR ADDITIONAL INFORMATION.

11 THE RECOMMENDED SET-UP FOR END FEED APPLICATORS IS POST-FEED WITH ITEM 2119653-1. THE APPLICATOR CAN BE CONFIGURED FOR PRE-FEED WITH ITEM 2119652-1 BUT MAY ENCOUNTER PROBLEMS WITH SOME APPLICATIONS. FEED ISSUES OR TERMINAL JAMMING MAY OCCUR IN THE PRE-FEED CONFIGURATION.

12 POSITION ITEM 27 IN FRONT OF ITEM 1.

*WARNING
ON INSTALLATION, SET WIRE DISC, ITEM 40 TO LARGEST WIRE SIZE SETTING. USE OF SETTINGS BELOW MINIMUM REQUIRED CRIMP HEIGHT SETTING WILL CAUSE DAMAGE TO CRIMP TOOLING.

-	1	1	1	1	2119782-1	FINE ADJUST HEAD ASM, PACIFIC STYLE	251
-	-	-	1	-	2119640-1	PUSH ROD, AIR FEED	250
-	-	-	1	-	2079988-1	BUSHING, LCH5-12, MISUMI	249
-	1	1	1	1	1-22279-3	SPRING, COMPRESSION	246
-	-	2	-	-	2168400-7	SHCS, LOW HEAD, RoHS, M5 X 10	240
-	-	-	-	1	2119580-1	MECHANICAL FEED ASSEMBLY	239
-	-	-	1	-	2063440-1	AIR FEED MODULE	238
-	-	1	-	-	2119740-2	TAG,IDENTIFICATION	213
-	1	1	1	1	1803071-1	SPACER,REAR SHEAR STRIP GUIDE	196
1 -	1	1	1	1	459722-7	BLADE, SHEAR	195
-	2	2	2	2	2168083-1	SCR, SKT HD CAP, RoHS, M3 X 8.0	191
-	-	REF	-	-	1901697-1	FEED FINGER ASSEMBLY,EF	183
-	-	-	2	-	21045-3	RING, RETAIN, EXTERN, 3/16 CRESCENT	172
-	1	1	1	1	994969-1	MAGNET, RARE EARTH HIGH ENERGY	166
-	REF	REF	REF	REF	994970-2	COUNTER, MAGNETIC	164
-	-	-	1	-	240638-1	SPRING, FEED FINGER	163
-	1	1	1	1	8-21084-1	O-RING, .801 ID, .070 DIA. MAT.	153
-	-	-	1	-	2119641-2	FEED CAM, AIR FEED	152
-	1	1	1	1	2119798-2	DETENT PIN	145
-	-	-	-	1	2119653-2	FEED CAM, POST FEED	142
-	1	1	1	1	1-2119655-8	APPLICATOR BASIC ASSEMBLY, EF	141
-	1	1	1	1	2119651-1	RAM, ASIAN STYLE, END FEED	140
-	1	1	1	1	2119092-2	BOLT, ADJUSTMENT	139
-	-	-	1	-	3-23627-7	PIN, RETAIN, GRVD, 3/16 X .854	137
-	-	REF	-	-	SEE NOTE 4	MEMORY CHIP, PROGRAMMED	135
-	-	1	-	-	1633743-1	SERVO FEED LATCH ASM	133
-	1	1	1	1	455888-5	SPACER, CRIMPER	82
-	1	1	1	1	2119956-2	DOCUMENTATION PACKAGE	71
-	2	2	2	2	3-18032-3	SCR, SET, FLT POINT M3 X 20.0	70
-	1	-	1	1	2119740-1	TAG,IDENTIFICATION	67
-	2	2	2	2	2168078-1	SCREW, DRIVE, RH, RoHS, 2 x .188	66
-	2	2	2	2	2168400-8	SHCS, LOW HEAD, RoHS, M4 X 16	64
-	1	1	1	1	2119793-1	LIMITER, ADJUSTMENT BOLT	63
6 -	3	3	3	3	992763-5	SCR, SET, SOC, CONE POINT, M3 x 4.0	62
-	-	-	-	1	5-18022-5	SCR, HEX HD CAP, M4 X 6.0	59
-	-	-	-	1	2063961-1	FEED FINGER	58
-	3	3	3	3	2168400-4	SHCS, LOW HEAD, RoHS, M4 X 8	57
-	2	2	2	2	5018030-1	NUT, HEX, REG, RoHS, M3	54
-	2	2	2	2	986965-8	NUT, LOCK, HEX, TORQUE (M4)	53
-	-	-	1	-	2119792-2	PAWL, EF, AIR	51
-	-	-	1	2	18023-9	SCR, SKT HD CAP M4 X 6.0	49
-	-	-	-	1	2119652-1	FEED CAM, PRE FEED	48
-	1	1	1	1	2079383-7	SCR, BHSC, RoHS (M8 X 25)	41
-	1	1	1	1	2119645-1	DISC, NUMBERED FA WIRE ADJUSTMENT	40
-	1	1	1	1	2119957-1	APPLICATOR SHIM PACK	39
-	1	1	1	1	2119644-1	RAM WASHER, PRECISION	38
-	7	7	7	7	1-18028-2	WASHER, FLAT, REG M4	33
-	2	2	2	2	1-2168083-2	SCR, SKT HD CAP, RoHS, M4 X 25	31
-	2	2	2	2	1-2168083-0	SCR, SKT HD CAP, RoHS, M4 X 10	29
-	1	1	1	1	690455-2	STRIPPER, FRONT CASTING	27
-	2	2	2	2	1-2168083-6	SCR, SKT HD CAP, RoHS, M4 X 35	25
-	1	1	1	1	1752371-1	PLATE, STRIP GUIDE	24
-	1	1	1	1	240825-9	PLATE, STRIP HOLD DOWN	23
-	2	2	2	2	22281-8	SPRING, COMPRESSION	22
-	1	1	1	1	1633168-1	ARM, STOCK DRAG	21
-	1	1	1	1	1-464452-6	DRAG, STOCK	20
-	2	2	2	2	1-1901259-3	GUIDE, LOWER STRIP	18
1 -	1	1	1	1	240644-1	PLATE, REAR SHEAR	11
-	2	2	2	2	6-240645-5	SPACER, SHEAR PLATE	10
1 1	1	1	1	1	1633342-7	ANVIL, WIRE	8
-	-	-	-	-	-	-	5
-	-	-	-	-	-	-	4
-	-	-	-	-	-	-	3
-	-	-	-	-	-	-	2
1 1	1	1	1	1	7-459492-8	CRIMPER, WIRE O	1
-	77-	27-	25-	22-	21 PART NO	DESCRIPTION	ITEM NO

PACIFIC VERSION
Shown on sheets 3 of 4 & 4 of 4
(Atlantic version shown on sheets 1 of 4 & 2 of 4)

THIS DRAWING IS A CONTROLLED DOCUMENT FOR TYCO ELECTRONICS CORPORATION. IT IS SUBJECT TO CHANGE AND THE CONTROLLING ENGINEERING ORGANIZATION SHOULD BE CONTACTED FOR THE LATEST REVISION.

DWN HOFFNER 26SEPT2014
CHK T. ELBIN 29SEPT2014
APVD T. ELBIN 29SEPT2014

DIMENSIONS: mm

TOLERANCES UNLESS OTHERWISE SPECIFIED:
0 PLC ±-
1 PLC ±0.5
2 PLC ±0.13
3 PLC ±0.013
4 PLC ±0.0001
ANGLES ±-

MATERIAL - -
FINISH - -

PRODUCT SPEC -
APPLICATION SPEC -
WEIGHT -

TE Connectivity
Harrisburg, PA 17105-3608

NAME Ocean End Feed Applicator -

SIZE	CAGE CODE	DRAWING NO	RESTRICTED TO
A1	00779	C-2150494	-

Customer Accessible Production Drawing | SCALE 1:1 | SHEET 3 OF 4 | REV B1

SHEETS 1 & 2 ARE NOT REQUIRED FOR PACIFIC VERSION

THIS DRAWING IS UNPUBLISHED. RELEASED FOR PUBLICATION 20
© COPYRIGHT 20 BY TYCO ELECTRONICS CORPORATION. ALL RIGHTS RESERVED.

LOC	DIST
A	66

REVISIONS

P	LTR	DESCRIPTION	DATE	DWN	APVD
	-	SEE SHEET 1	-	-	-

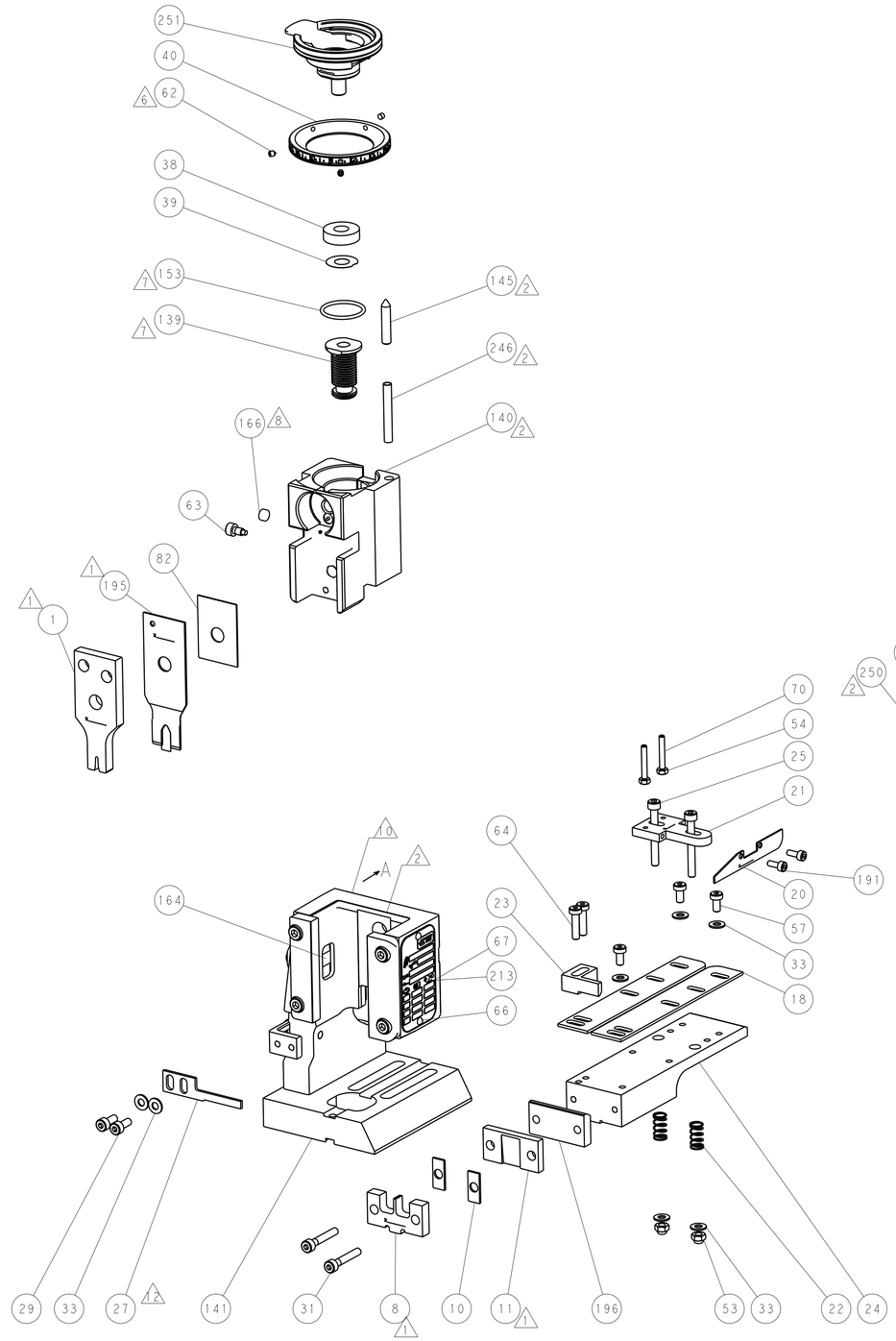

FEED TYPE

MECHANICAL

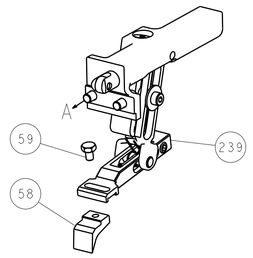

PNEUMATIC

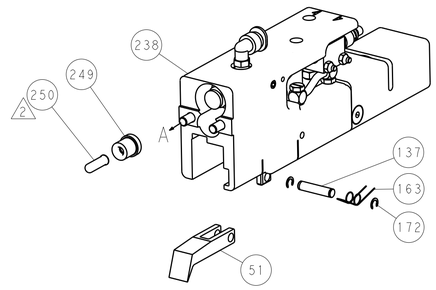

SERVO LATCH PLATE

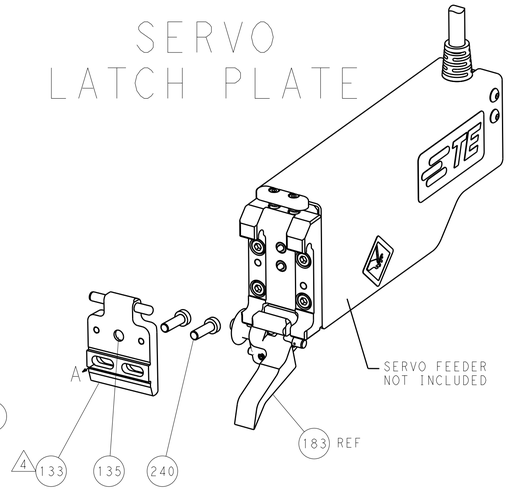

CAM POSITIONS

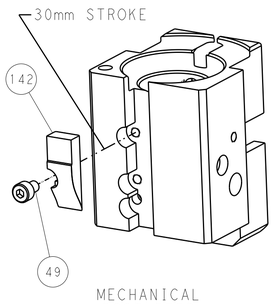

MECHANICAL
POST FEED

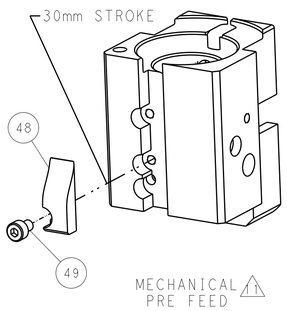

MECHANICAL 1
PRE FEED

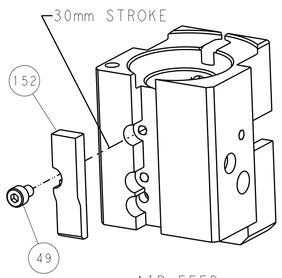

AIR FEED

PACIFIC VERSION

Shown on sheets 3 of 4 & 4 of 4
(Atlantic version shown on sheets 1 of 4 & 2 of 4)

THIS DRAWING IS A CONTROLLED DOCUMENT FOR TYCO ELECTRONICS CORPORATION. IT IS SUBJECT TO CHANGE AND THE CONTROLLING ENGINEERING ORGANIZATION SHOULD BE CONTACTED FOR THE LATEST REVISION.

DWN	HOFFNER	26SEPT2014
CHK	T. ELBIN	29SEPT2014
APVD	T. ELBIN	29SEPT2014

DIMENSIONS: mm

TOLERANCES UNLESS OTHERWISE SPECIFIED:
0 PLC ±-
1 PLC ±0.5
2 PLC ±0.13
3 PLC ±0.013
4 PLC ±0.0001
ANGLES ±-

MATERIAL - -
FINISH - -

PRODUCT SPEC -
APPLICATION SPEC -
WEIGHT -

TE Connectivity
Harrisburg, PA 17105-3608

NAME: Ocean End Feed Applicator -

SIZE	CAGE CODE	DRAWING NO	RESTRICTED TO
A1	00779	C-2150494	-

Customer Accessible Production Drawing | SCALE 1:1 | SHEET 4 OF 4 | REV B1

AMP 4805 REV 31MAR2000

SHEETS 1 & 2 ARE NOT REQUIRED FOR PACIFIC VERSION