PART NAME	HAND HELD ENCLOSURE (STYLE B)	PART No.	HH-3421 & HH-3421-BC

MATERIAL: HIGH-IMPACT ABS (RATED UL94-V0)
COLOR: LIGHT GRAY

SUFFIX -BC UNITS TO HAVE BATTERY COMPARTMENT ONLY

ALL DIMENSIONS HAVE ±0.015 TOLERANCE

SIX (6) M3 x 1.173" LG. SCREWS SUPPLIED FOR ASSEMBLY

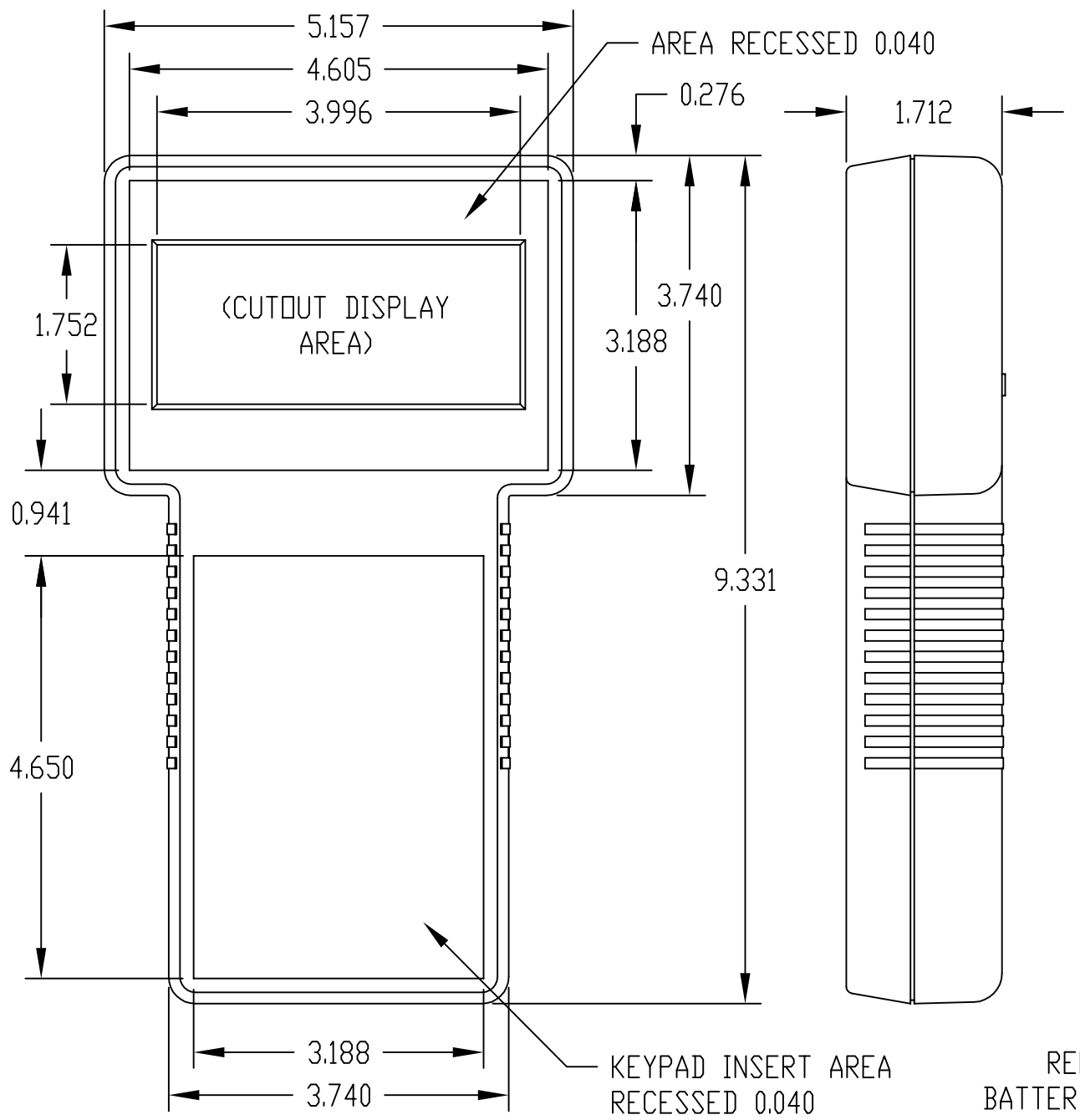

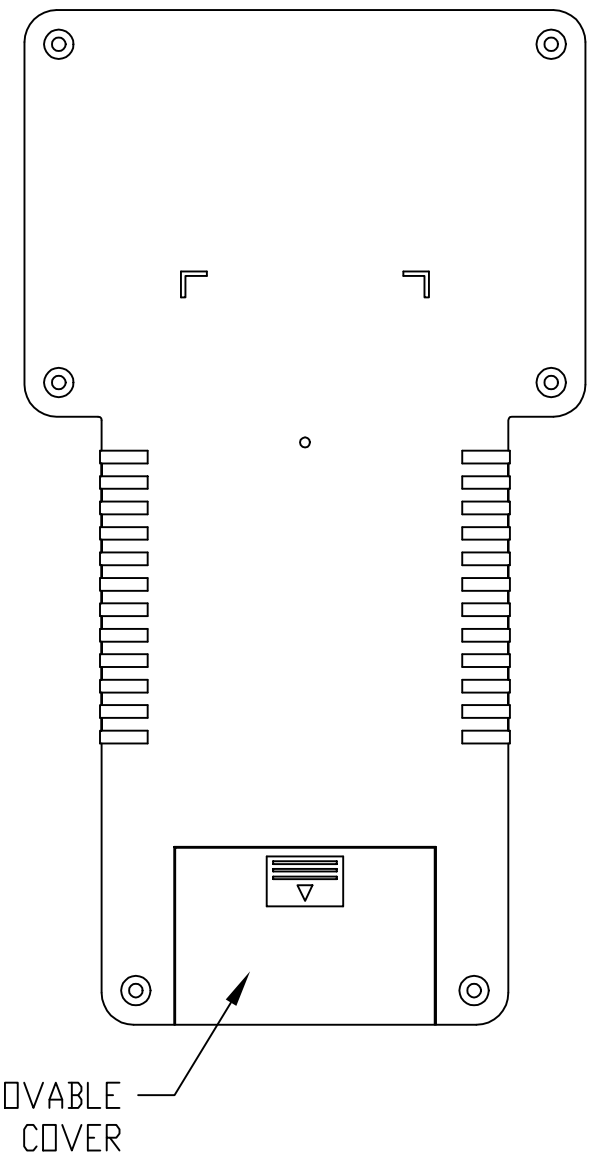

NOTE: MOUNTING BOSSES USE EITHER M2.5 METRIC OR #4 STD. SHEET METAL SCREWS x 0.250" LG. (NOT SUPPLIED)

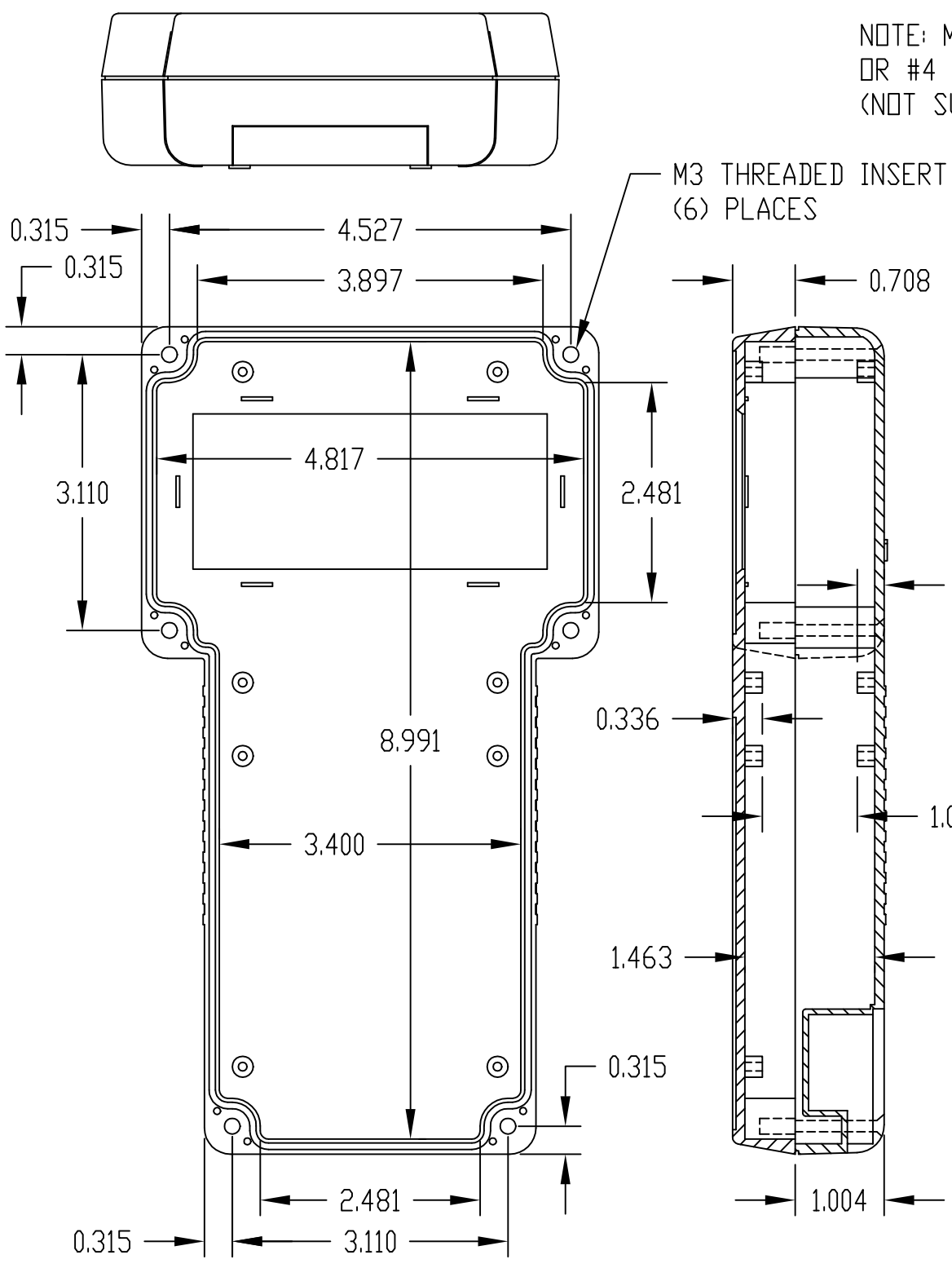

INSIDE VIEW OF TOP

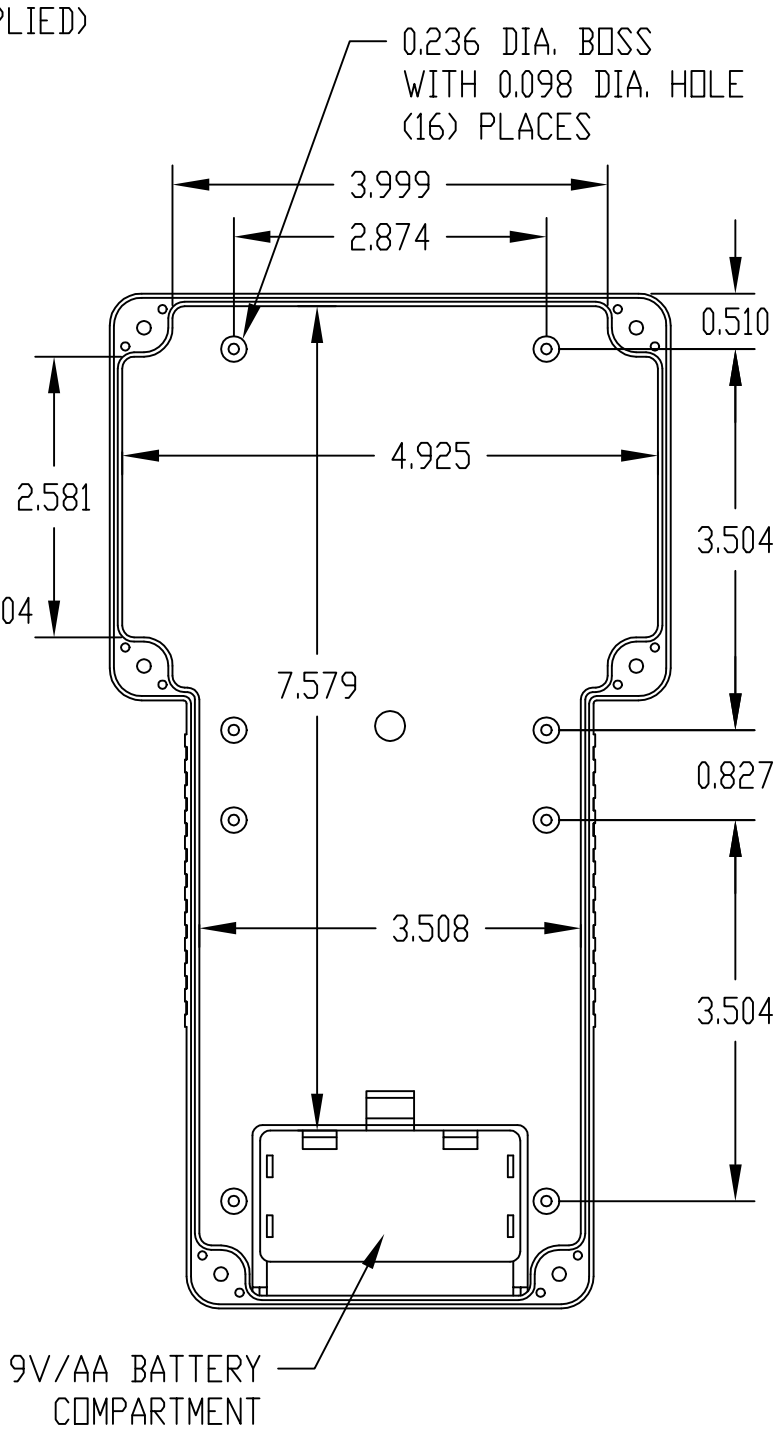

INSIDE VIEW OF BOTTOM