MATERIAL

2-1. Frame	:	DIE-CAST ALUMINUM
2-2. Impeller	:	Thermoplastic PBT of UL 94V-0
2-3. Bobbin	:	Thermoplastic PBT of UL 94V-0
2-4. Lead Wire	:	UL3265,28AWG,+RED;-BLACK YELLOW:3rd wire

DIMENSIONS

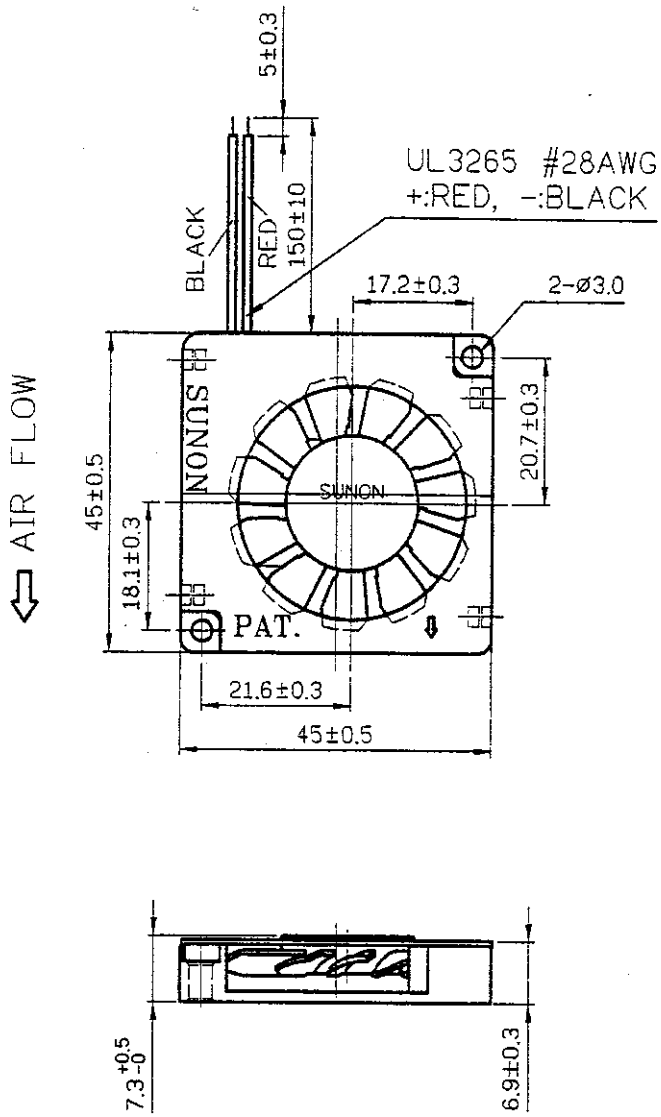

1.One directional exhaust

2.The Best Mounting Direction: Fan blade face up or shaft horizontal direction.

UNITS：mm

建準電機工業股份有限公司 SUNONWEALTH ELECTRIC MACHINE INDUSTRY CO., LTD.	SPEC. NO.	B450023	REVISE DATE	01.04.2001
	ISSUE DATE	03. 03. 1999	EDITION	2.90 1.11
	PAGE	5 OF 6		